Damper actuator for operating air control dampers in ventilation and air-conditioning systems for building services installations

- **For air control dampers up to approx. 2 m²**
- **Torque 10 Nm**
- **Nominal voltage AC/DC 24 V**
- **Control: Open-close or 3-point**

Technical data

Electrical data	Nominal voltage		AC 24 V, 50/60 Hz DC 24 V
	Nominal voltage range		AC/DC 19.2 ... 28.8 V
	Power consumption	In operation	1.5 W @ nominal torque
		At rest	0.2 W
		For wire sizing	3.5 VA
	Connection		Cable 1 m, 3 x 0.75 mm²
Functional data	Torque (nominal torque)		Min. 10 Nm @ nominal voltage
	Direction of rotation		Reversible with switch 0 ↶ or 1 ↷
	Manual override		Gearing latch disengaged with pushbutton, detentable
	Angle of rotation		Max. 95°∢, limited on both sides by means of adjustable, mechanical end stops
	Running time		150 s / 90°∢
	Sound power level		Max. 35 dB (A)
	Position indication		Mechanical, pluggable
Safety	Protection class		**III** Safety extra-low voltage
	Degree of protection		IP54 in any mounting position
	EMC		CE according to 89/336/EEC
	Mode of operation		Type 1 (EN 60730-1)
	Rated impulse voltage		0.8 kV (EN 60730-1)
	Control pollution degree		3 (EN 60730-1)
	Ambient temperature range		–30 ... +50°C
	Non-operating temperature		–40 ... +80°C
	Ambient humidity range		95% r.H., non-condensating (EN 60730-1)
	Maintenance		Maintenance-free
Dimensions / Weight	Dimensions		See «Dimensions» on page 2
	Weight		Approx. 750 g

Safety notes

⚠

- **The damper actuator is not allowed to be used outside the specified field of application, especially in aircraft or any other form of air transport.**
- **Assembly must be carried out by trained personnel. Any legal regulations or regulations issued by authorities must be observed during assembly.**
- **The device may only be opened at the manufacturer‘s site. It does not contain any parts that can be replaced or repaired by the user.**
- **The cable must not be removed from the device.**
- **When calculating the required torque, the specifications supplied by the damper manufacturers (cross section, design, installation site), and the air flow conditions must be observed.**
- **The device contains electrical and electronic components and is not allowed to be disposed of as household refuse. All locally valid regulations and requirements must be observed.**

Product features

Simple direct mounting Simple direct mounting on the damper spindle with a universal spindle clamp, supplied with an anti-rotation strap to prevent the actuator from rotating.

Manual override Manual operation is possible with the pushbutton (the gearing latch remains disengaged as long as the pushbutton is pressed or detented).

Adjustable angle of rotation Adjustable angle of rotation with mechanical end stops.

High functional reliability The actuator is overload-proof, requires no limit switches and automatically stops when the end stop is reached.

Accessories

	Description	Data sheet
Electrical accessories	Auxiliary switch, type S..A..	T2 - S..A..
	Feedback potentiometer, type P..A..	T2 - P..A..
Mechnical accessories	Various accessories (clamps, shaft extensions etc.)	T2 - Z-NM..A..

Electrical installation

Wiring diagrams

Notes
- Connection via safety isolating transformer.
- Other actuators can be connected in parallel. Please note the performance data.

Open-close control

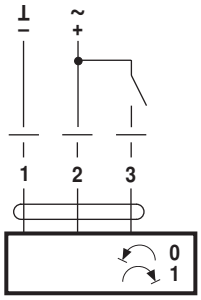

3-point control

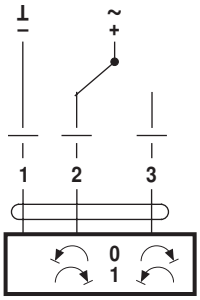

Direction of rotation

Cable colours:
1 = black
2 = red
3 = white

Dimensions [mm]

Dimensional drawings

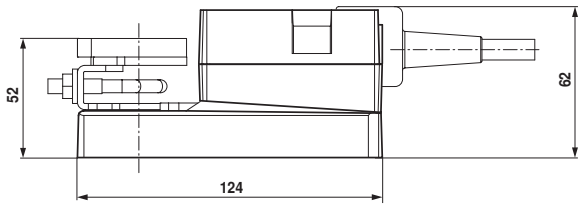

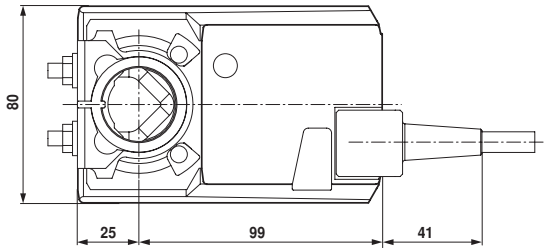

Damper spindle	Length			
	>40	8 ... 26.7	>8	<26.7
	>20	8 ... 20	>8	<20

* Option (Accessory K-NA)

70214-00002.E

1

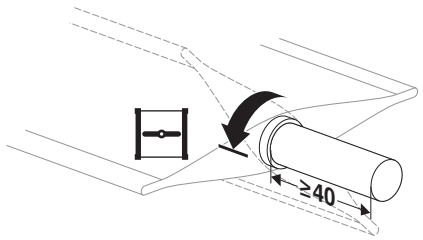

8 ... 26.7	≥8	≤26.7

2

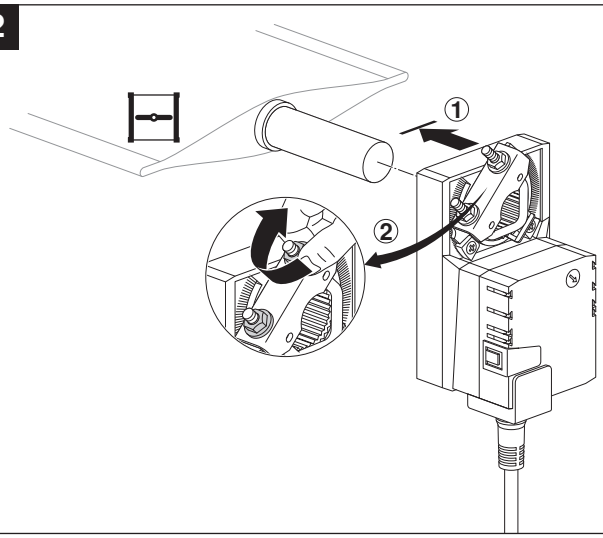

3

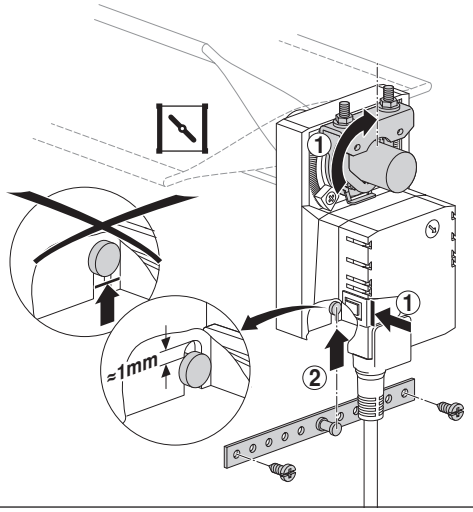

4

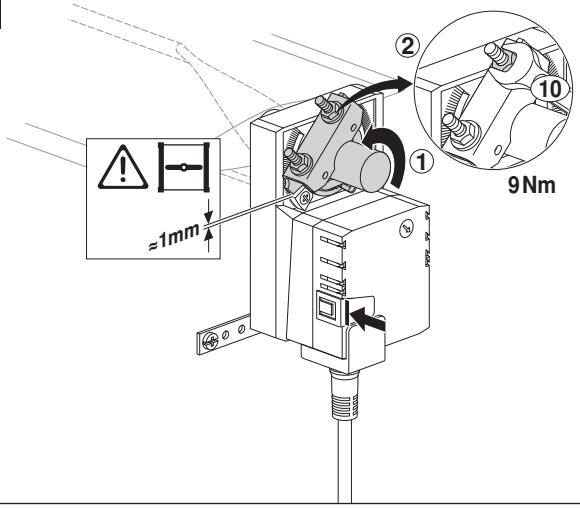

5

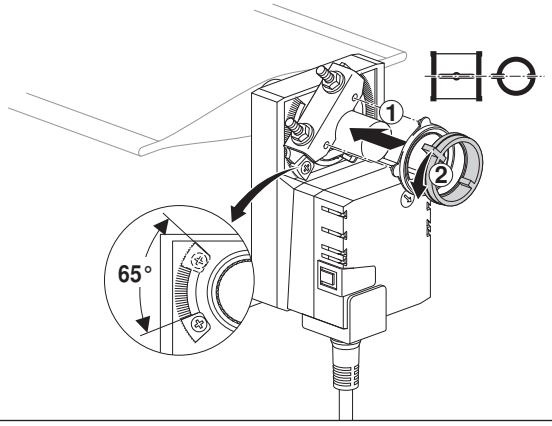

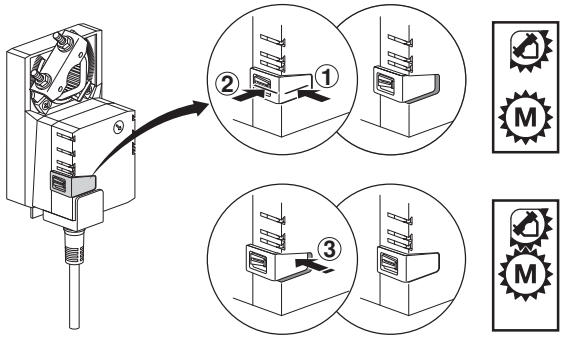

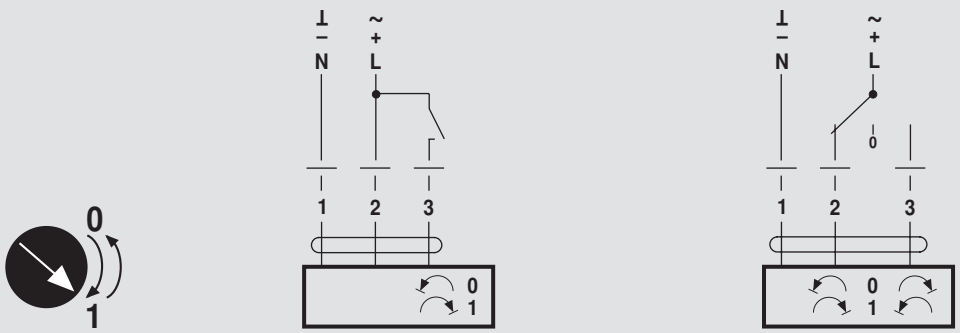

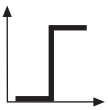

AC 24 V / DC 24 V

DC 48 ... 110 V
(NM72A..)

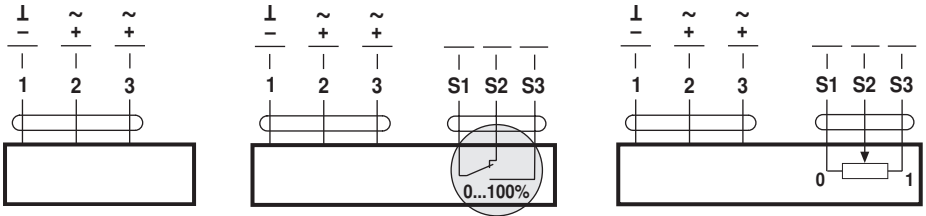

NM24A..
NM72A..

NM24A-S..

NM24AP5..

AC 100 ... 240 V

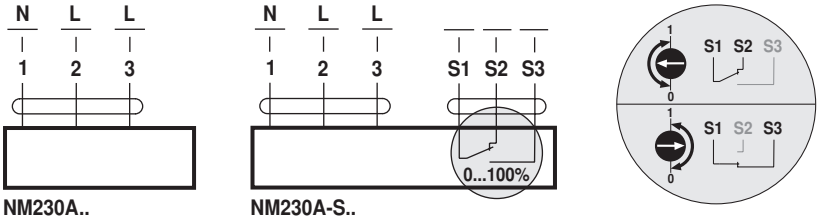

NM230A..

NM230A-S..

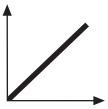

AC 24 V / DC 24 V

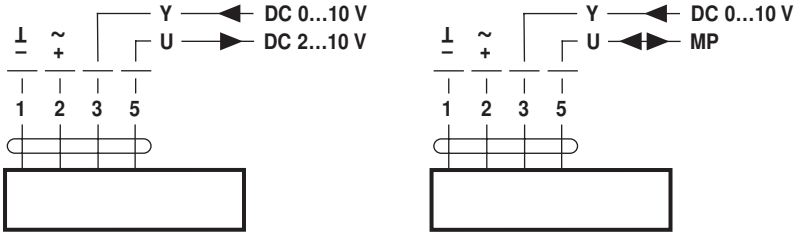

NM24A-SR..
NM24A-MF..

NM24A-MP..

DC 48 ... 110 V
(NM72A-SR..)

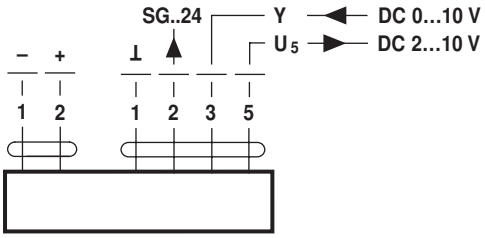

NM72A-SR..

AC 100 ... 240 V

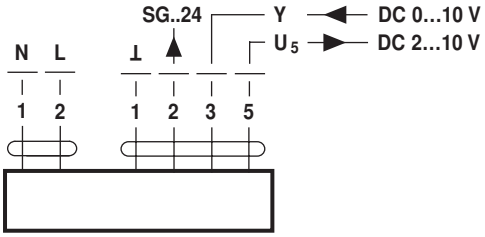

NM230ASR..

AC 24 V / DC 24 V
(NM24A-V / VR..)

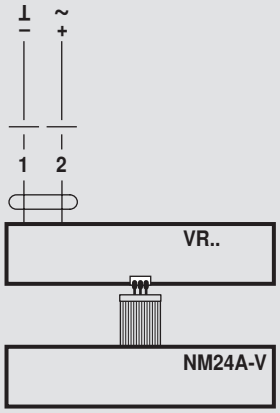

NM24A-V / VR..

BELIMO

Technical data sheet — Damper actuator NM24A-S

Damper actuator for operating air control dampers in ventilation and air-conditioning systems for building services installations

- **For air control dampers up to approx. 2 m²**
- **Torque 10 Nm**
- **Nominal voltage AC/DC 24 V**
- **Control: Open-close or 3-point**
- **Integrated auxiliary switch**

Technical data

Electrical data	Nominal voltage	AC 24 V, 50/60 Hz DC 24 V
	Nominal voltage range	AC/DC 19.2 ... 28.8 V
	Power consumption In operation	1.5 W @ nominal torque
	At rest	0.2 W
	For wire sizing	4 VA
	Auxiliary switch	1 x SPDT, 1 mA ... 3 (0.5) A, AC 250 V ⧈ (0 ... 100% adjustable)
	Connection Motor	Cable 1 m, 3 x 0.75 mm²
	Auxiliary switch	Cable 1 m, 3 x 0.75 mm²
Functional data	Torque (nominal torque)	Min. 10 Nm @ nominal voltage
	Direction of rotation	Reversible with switch 0 ↶ or 1 ↷
	Manual override	Gearing latch disengaged with pushbutton, self-resetting
	Angle of rotation	Max. 95°∢, limited on both sides by means of adjustable, mechanical end stops
	Running time	150 s
	Sound power level	Max. 35 dB (A)
	Position indication	Mechanical, pluggable
Safety	Protection class	**III** Safety extra-low voltage
	Degree of protection	IP54 in any mounting position
	EMC	CE according to 89/336/EEC
	Mode of operation	Type 1 (to EN 60730-1)
	Ambient temperature range	–30 ... +50°C
	Non-operating temperature	–40 ... +80°C
	Ambient humidity range	95% r.H., non-condensating (EN 60730-1)
	Maintenance	Maintenance-free
Dimensions / Weight	Dimensions	See «Dimensions» on page 2
	Weight	Approx. 850 g

Safety notes

⚠

- **The damper actuator is not allowed to be used outside the specified field of application, especially in aircraft.**
- **Assembly must be carried out by trained personnel. Any legal regulations or regulations issued by authorities must be observed during assembly.**
- **The device may only be opened at the manufacturer's site. It does not contain any parts that can be replaced or repaired by the user.**
- **The cables must not be removed from the device.**
- **When calculating the required torque, the specifications supplied by the damper manufacturers (cross section, design, installation site), and the air flow conditions must be observed.**
- **The device contains electrical and electronic components and is not allowed to be disposed of as household refuse. All locally valid regulations and requirements must be observed.**

Product features

Simple direct mounting Simple direct mounting on the damper spindle with a universal spindle clamp, supplied with an anti-rotation strap to prevent the actuator from rotating.

Manual override Manual operation is possible with the self-resetting pushbutton (the gearing latch remains disengaged as long as the pushbutton is pressed).

Adjustable angle of rotation Adjustable angle of rotation with mechanical end stops.

High functional reliability The actuator is overload-proof, requires no limit switches and automatically stops when the end stop is reached.

Flexible signalization Flexible signalization with adjustable auxiliary switch (0 ... 100%).

Accessories

	Description	Data sheet
Electrical accessories	Auxiliary switch S..A..	T2 - S..A..
	Feedback potentiometer P..A..	T2 - P..A..
Mechanical accessories	Various accessories (clamps, shaft extensions etc.)	T2 - Z-NM..A..

Electrical installation

Notes
- Connection via safety isolating transformer.
- Other actuators can be connected in parallel. Please note the performance data.

Wiring diagrams

Open-close control

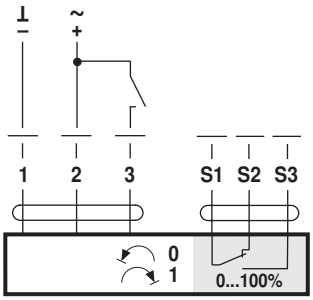

3-point control

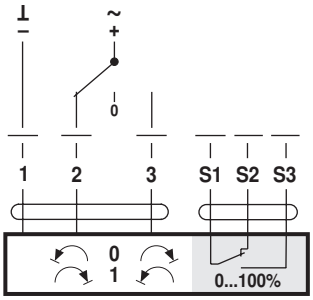

Direction of rotation

Auxiliary switch

Dimensions [mm]

Dimensional drawings

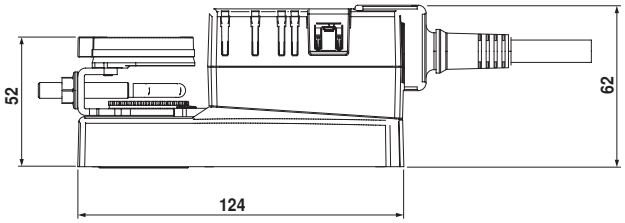

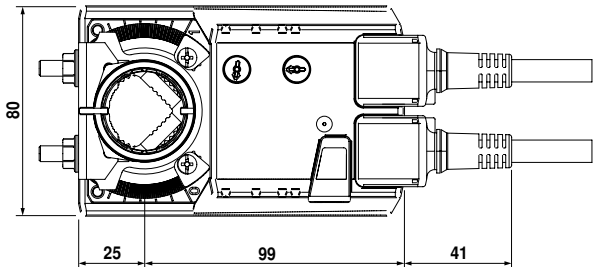

Damper spindle	Length	
Clamp on top	min. 40	8 ... 26.7
Clamp on bottom *	min. 20	8 ... 20

* Option (Accessory K-NA)

70214-00002.E

1

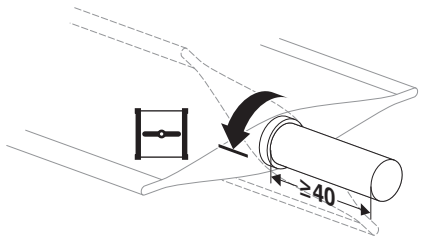

8 ... 26.7	≥8	≤26.7

2

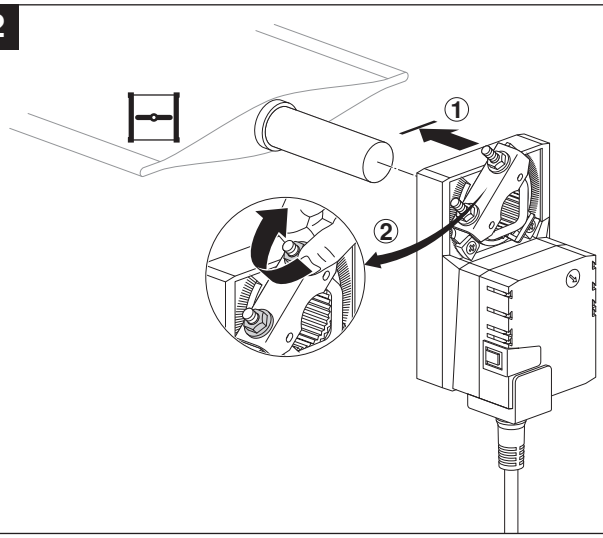

3

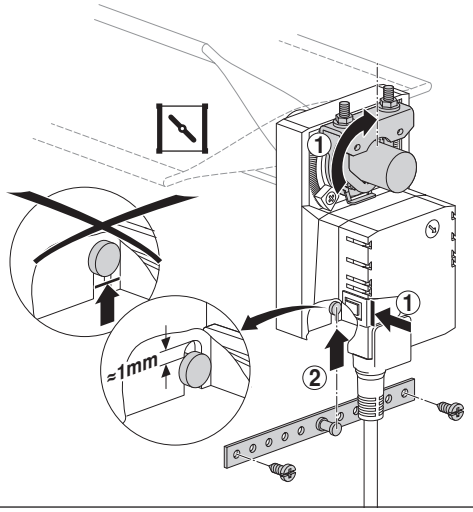

4

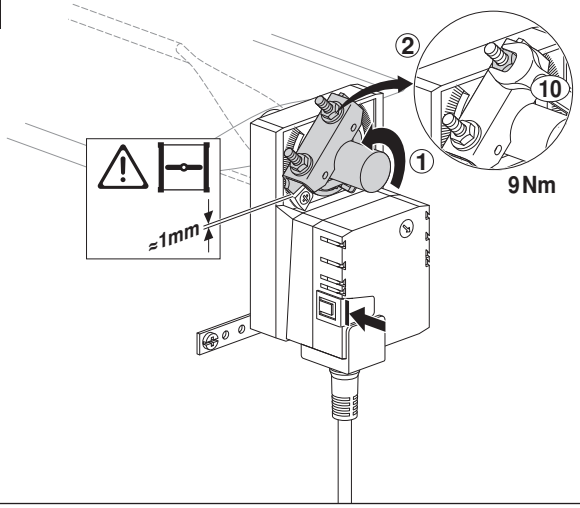

5

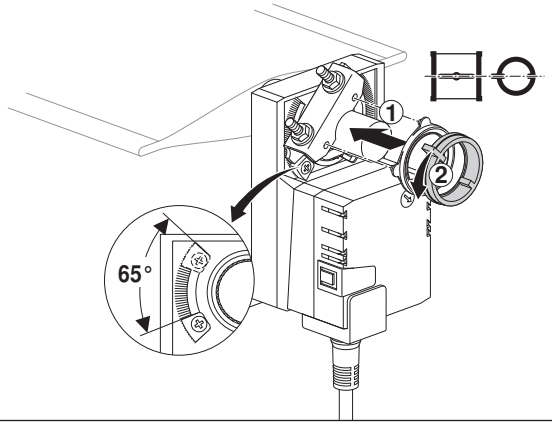

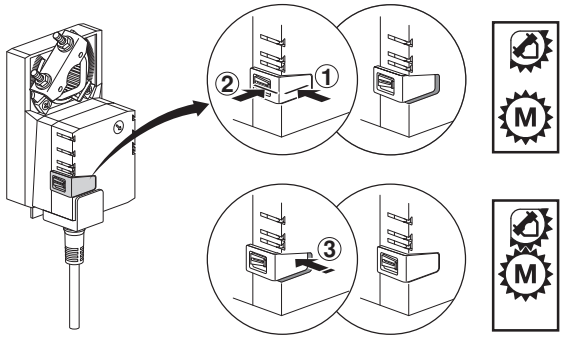

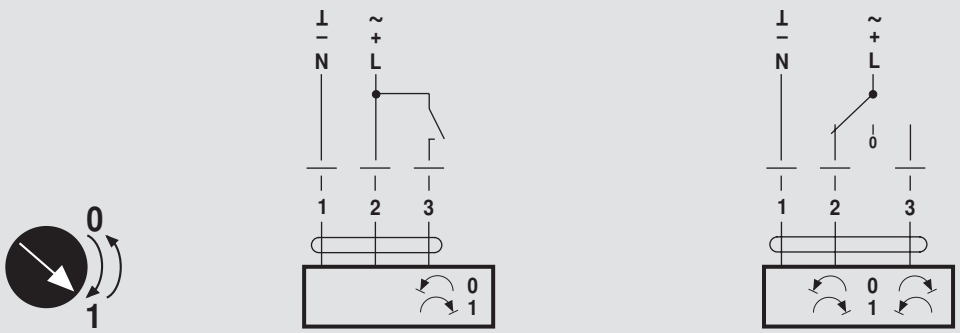

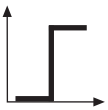

AC 24 V / DC 24 V

DC 48 ... 110 V
(NM72A..)

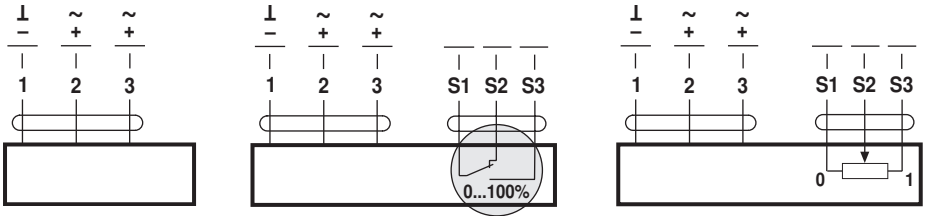

NM24A..
NM72A..

NM24A-S..

NM24AP5..

AC 100 ... 240 V

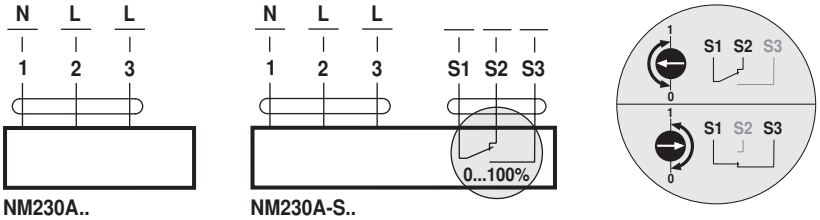

NM230A..

NM230A-S..

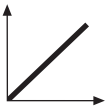

AC 24 V / DC 24 V

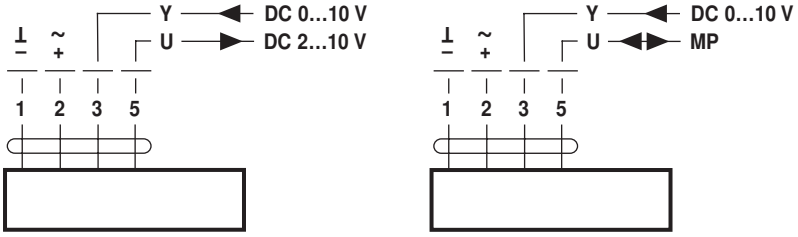

NM24A-SR..
NM24A-MF..

NM24A-MP..

DC 48 ... 110 V
(NM72A-SR..)

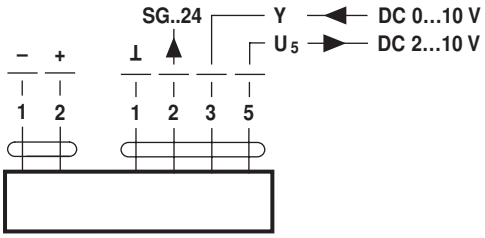

NM72A-SR..

AC 100 ... 240 V

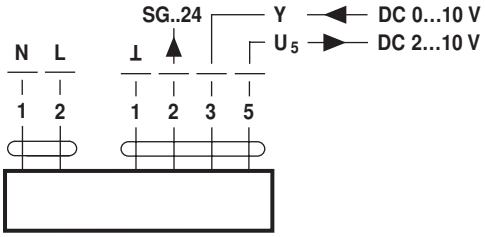

NM230ASR..

AC 24 V / DC 24 V
(NM24A-V / VR..)

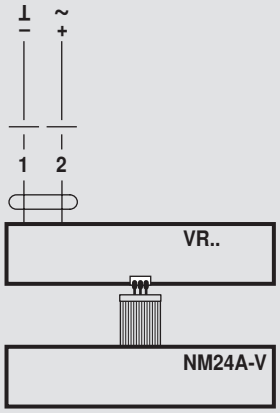

NM24A-V / VR..

Damper actuator for operating air control dampers in ventilation and air-conditioning systems for building services installations

- **For air control dampers up to approx. 2 m²**
- **Torque 10 Nm**
- **Nominal voltage AC/DC 24 V**
- **Control: modulating DC 0 ... 10 V, position feedback DC 2 ... 10 V**

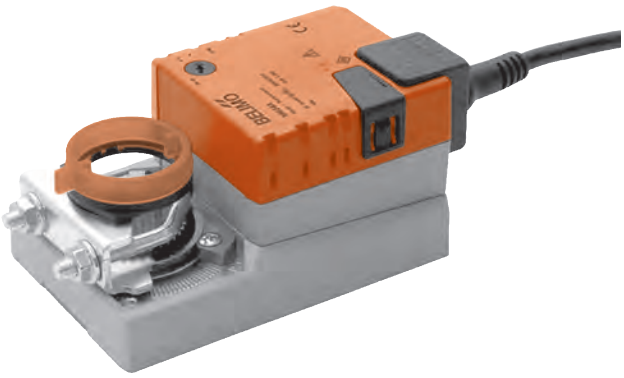

Technische Daten

Electrical data	Nominal voltage		AC 24 V, 50/60 Hz DC 24 V
	Nominal voltage range		AC/DC 19.2 ... 28.8 V
	Power consumption	In operation	2 W @ nominal torque
		At rest	0.4 W
		For wire sizing	4 VA
	Connection		Cable 1 m, 4 x 0.75 mm²
Functional data	Torque (nominal torque)		Min. 10 Nm @ nominal voltage
	Control	Control signal Y	DC 0 ... 10 V, typical input impedance 100 kΩ
		Working range	DC 2 ... 10 V
	Position feedback (Measuring voltage)		DC 2 ... 10 V, max. 1 mA
	Position accuracy		±5%
	Direction of rotation		Reversible with switch 0 / 1
	Direction of rotation at Y = 0 V		at switch position 0 ↺ resp. 1 ↻
	Manual override		Gearing latch disengaged with pushbutton, self-resetting
	Angle of rotation		Max. 95°∢, limited on both sides by means of adjustable, mechanical end stops
	Running time		150 s
	Sound power level		Max. 35 dB (A)
	Position indication		Mechanical, pluggable
Safety	Protection class		**III** Safety extra-low voltage
	Degree of protection		IP54 in any mounting position
	EMC		CE according to 89/336/EEC
	Mode of operation		Type 1 (to EN 60730-1)
	Ambient temperature range		–30 ... +50°C
	Non-operating temperature		–40 ... +80°C
	Ambient humidity range		95% r.H., non-condensating (EN 60730-1)
	Maintenance		Maintenance-free
Dimensions / Weight	Dimensions		See «Dimensions» on page 2
	Weight		Approx. 800 g

Safety notes

- **The damper actuator is not allowed to be used outside the specified field of application, especially in aircraft or any other form of air transport.**
- **Assembly must be carried out by trained personnel. Any legal regulations or regulations issued by authorities must be observed during assembly.**
- **The device may only be opened at the manufacturer's site. It does not contain any parts that can be replaced or repaired by the user.**
- **The cable must not be removed from the device.**
- **When calculating the required torque, the specifications supplied by the damper manufacturers (cross section, design, installation site), and the air flow conditions must be observed.**
- **The device contains electrical and electronic components and is not allowed to be disposed of as household refuse. All locally valid regulations and requirements must be observed.**

Product features

Mode of operation
The actuator is controlled by means of a standard control signal DC 0 ... 10 V. It opens to the position dictated by this signal. The measuring voltage U allows the damper position (0 ... 100%) to be electrically indicated and serves as a follow-up control signal for other actuators.

Simple direct mounting
Simple direct mounting on the damper spindle with a universal spindle clamp, supplied with an anti-rotation strap to prevent the actuator from rotating.

Manual override
Manual operation is possible with the self-resetting pushbutton (the gearing latch remains disengaged as long as the pushbutton is pressed).

Adjustable angle of rotation
Adjustable angle of rotation with mechanical end stops.

High functional reliability
The actuator is overload-proof, requires no limit switches and automatically stops when the end stop is reached.

Accessories

	Description	Data sheet
Electrical accessories	Auxiliary switch S..A..	T2 - S..A..
	Feedback potentiometer P..A..	T2 - P..A..
	Range controller SBG24	T2 - SBG24
	Positioner SG..24	T2 - SG..24
	Digital position indication ZAD24	T2 - ZAD24
Mechanical accessories	Various accessories (clamps, shaft extensions etc.)	T2 - Z-NM..A..

Electrical installation

Wiring diagrams

Notes
- Connection via safety isolating transformer.
- Other actuators can be connected in parallel. Please note the performance data.

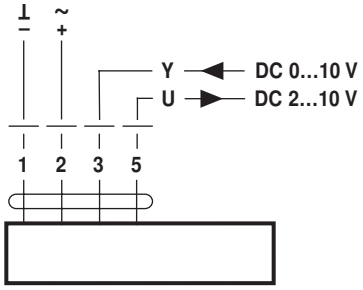

Dimensions [mm]

Dimensional drawings

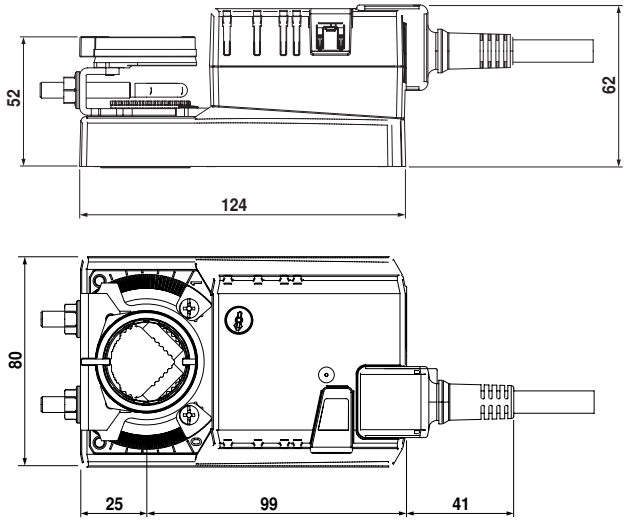

Damper spindle	Length	○⌶◇
Clamp on top	min. 40	8 ... 26.7
Clamp on bottom *	min. 20	8 ... 20

* Option (Accessory K-NA)

70214-00002.E

1

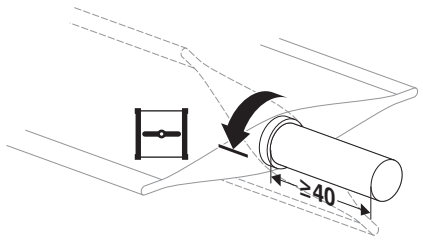

8 ... 26.7	≥8	≤26.7

2

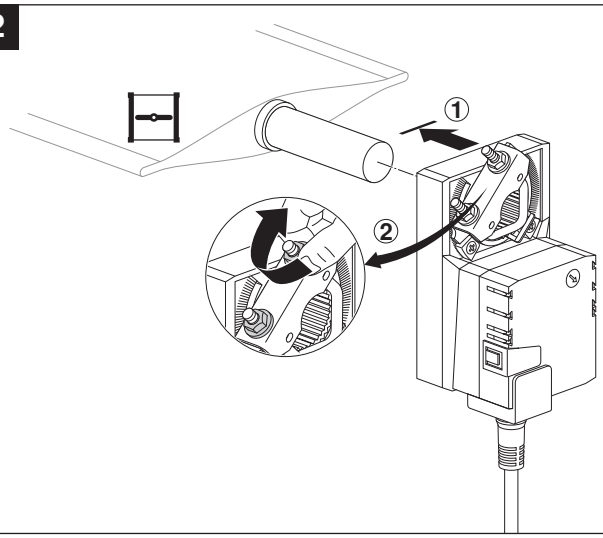

3

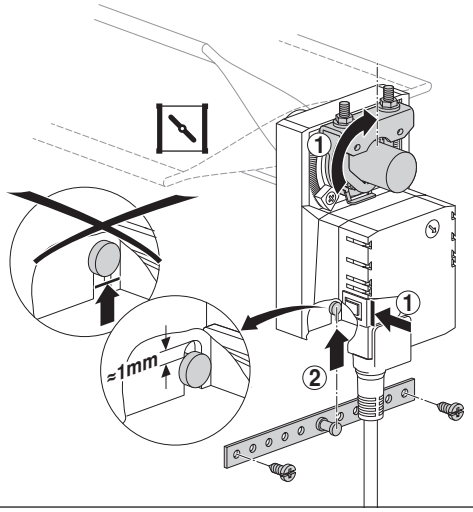

4

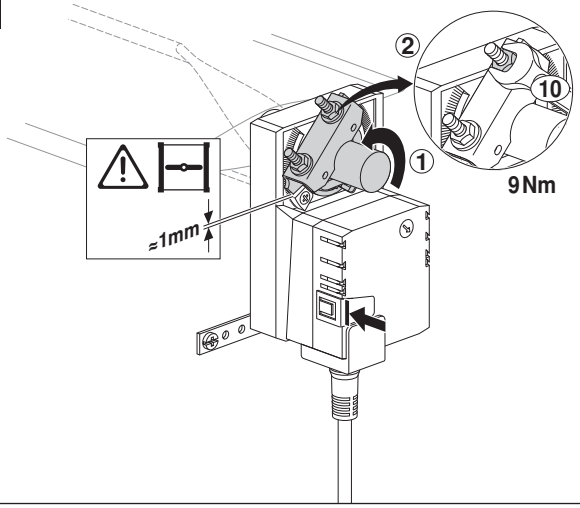

5

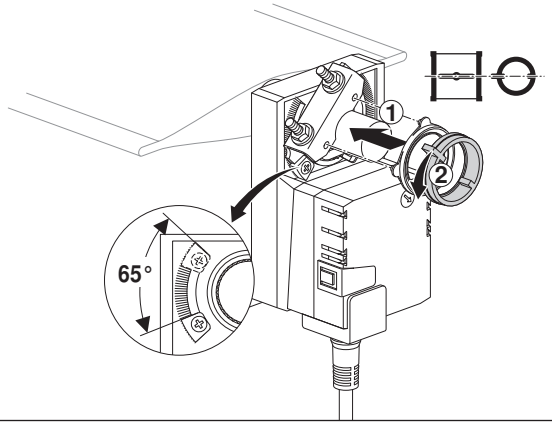

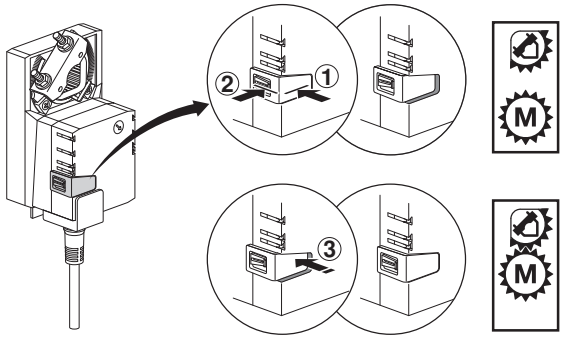

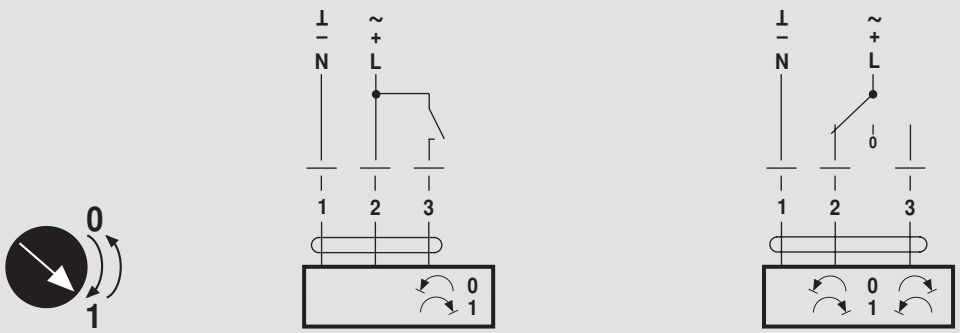

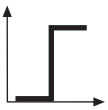

AC 24 V / DC 24 V

DC 48 ... 110 V
(NM72A..)

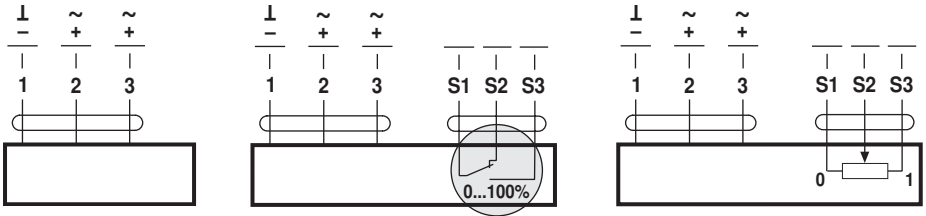

NM24A..
NM72A..

NM24A-S..

NM24AP5..

AC 100 ... 240 V

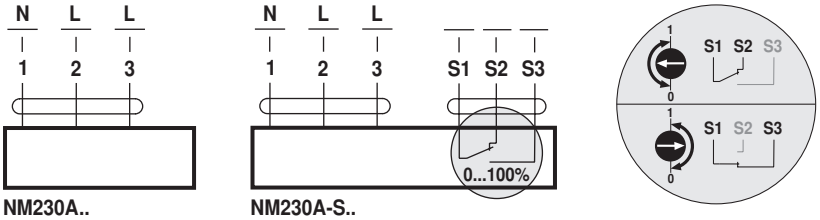

NM230A..

NM230A-S..

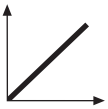

AC 24 V / DC 24 V

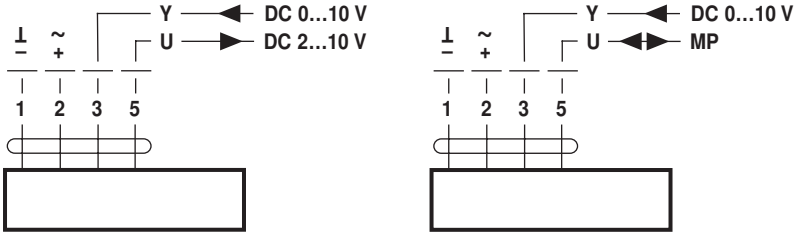

NM24A-SR..
NM24A-MF..

NM24A-MP..

DC 48 ... 110 V
(NM72A-SR..)

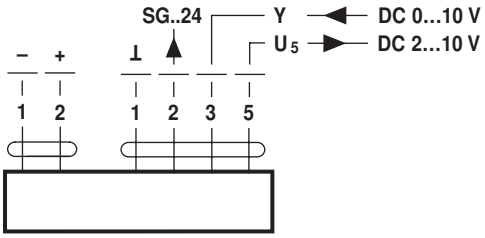

NM72A-SR..

AC 100 ... 240 V

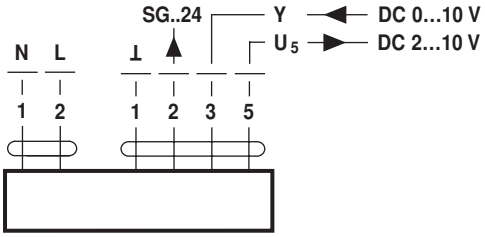

NM230ASR..

AC 24 V / DC 24 V
(NM24A-V / VR..)

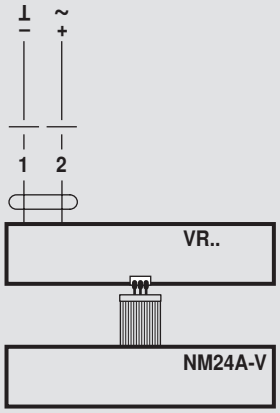

NM24A-V / VR..

Damper actuator for operating air control dampers in ventilation and air-conditioning systems for building services installations

- **For air control dampers up to approx. 2 m²**
- **Torque 10 Nm**
- **Nominal voltage AC 100 ... 240 V**
- **Control: Open-close or 3-point**

Technical data

Electrical data	Nominal voltage		AC 100 ... 240 V, 50/60 Hz
	Nominal voltage range		AC 85 ... 265 V
	Power consumption	In operation	2.5 W @ nominal torque
		At rest	0.6 W
		For wire sizing	5.5 VA
	Connection		Cable 1 m, 3 x 0.75 mm²
Functional data	Torque (nominal torque)		Min. 10 Nm @ nominal voltage
	Direction of rotation		Reversible with switch 0 ↶ or 1 ↷
	Manual override		Gearing latch disengaged with pushbutton, detentable
	Angle of rotation		Max. 95°∢, limited on both sides by means of adjustable, mechanical end stops
	Running time		150 s / 90°∢
	Sound power level		Max. 35 dB (A)
	Position indication		Mechanical, pluggable
Safety	Protection class		**II** Totally insulated ⧈
	Degree of protection		IP54 in any mounting position
	EMC		CE according to 89/336/EEC
	Low voltage directive		CE according to 73/23/EEC
	Mode of operation		Type 1 (EN 60730-1)
	Rated impulse voltage		2.5 kV (EN 60730-1)
	Control pollution degree		3 (EN 60730-1)
	Ambient temperature range		–30 ... +50°C
	Non-operating temperature		–40 ... +80°C
	Ambient humidity range		95% r.H., non-condensating (EN 60730-1)
	Maintenance		Maintenance-free
Dimensions / Weight	Dimensions		See «Dimensions» on page 2
	Weight		Approx. 750 g

Safety notes

⚠

- **The damper actuator is not allowed to be used outside the specified field of application, especially in aircraft or any other form of air transport.**
- **Caution: Power supply voltage !**
- **Assembly must be carried out by trained personnel. Any legal regulations or regulations issued by authorities must be observed during assembly.**
- **The device may only be opened at the manufacturer's site. It does not contain any parts that can be replaced or repaired by the user.**
- **The cable must not be removed from the device.**
- **When calculating the required torque, the specifications supplied by the damper manufacturers (cross section, design, installation site), and the air flow conditions must be observed.**
- **The device contains electrical and electronic components and is not allowed to be disposed of as household refuse. All locally valid regulations and requirements must be observed.**

Product features

Simple direct mounting Simple direct mounting on the damper spindle with a universal spindle clamp, supplied with an anti-rotation strap to prevent the actuator from rotating.

Manual override Manual operation is possible with the pushbutton (the gearing latch remains disengaged as long as the pushbutton is pressed or detented).

Adjustable angle of rotation Adjustable angle of rotation with mechanical end stops.

High functional reliability The actuator is overload-proof, requires no limit switches and automatically stops when the end stop is reached.

Accessories

	Description	Data sheet
Electrical accessories	Auxiliary switch, type S..A..	T2 - S..A..
	Feedback potentiometer, type P..A..	T2 - P..A..
Mechnical accessories	Various accessories (clamps, shaft extensions etc.)	T2 - Z-NM..A..

Electrical installation

Wiring diagrams

Notes
- Caution: Power supply voltage !
- Other actuators can be connected in parallel. Please note the performance data.

Open-close control

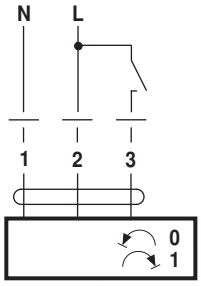

3-point control

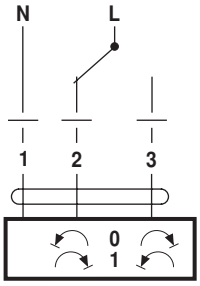

Direction of rotation

Cable colours:
1 = blue
2 = brown
3 = white

Dimensions [mm]

Dimensional drawings

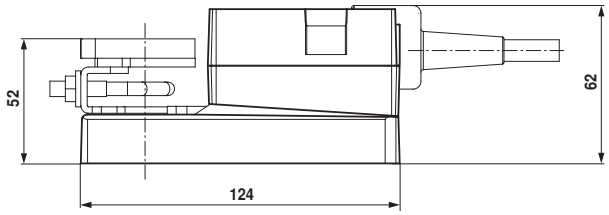

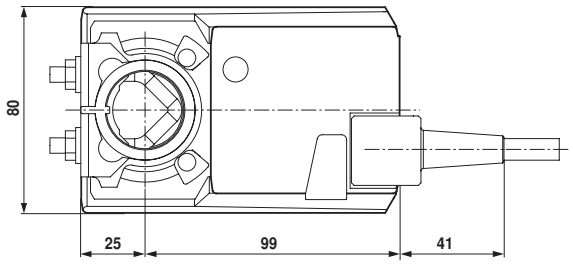

Damper spindle	Length	●	■	◆
	>40	8 ... 26.7	>8	<26.7
	>20	8 ... 20	>8	<20

* Option (Accessory K-NA)

70214-00002.E

1

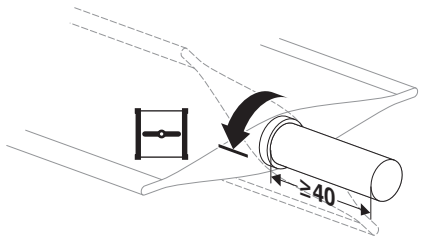

8 ... 26.7	≥8	≤26.7

2

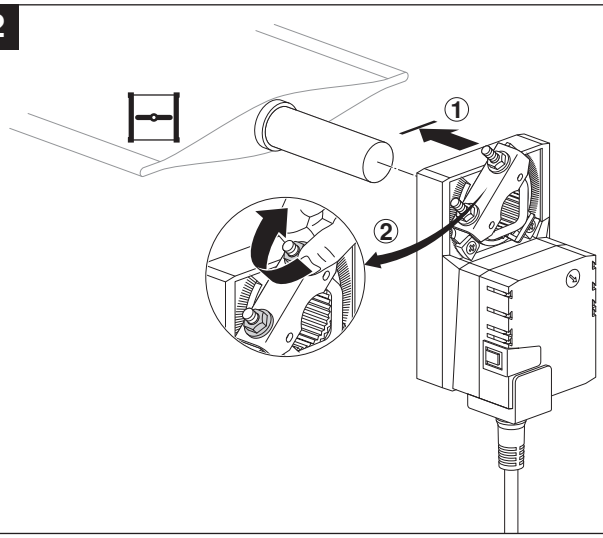

3

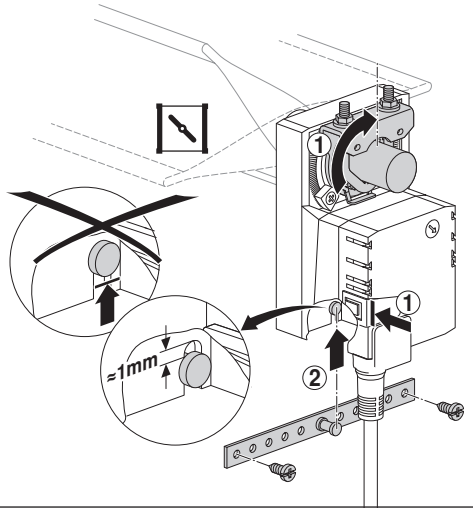

4

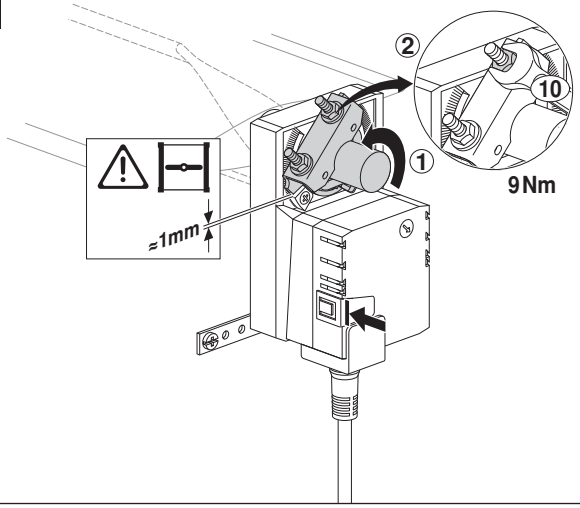

5

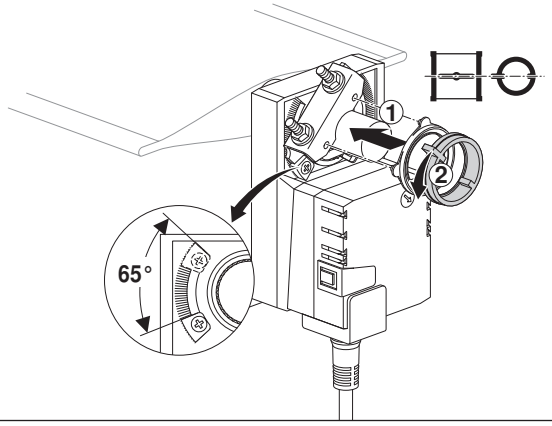

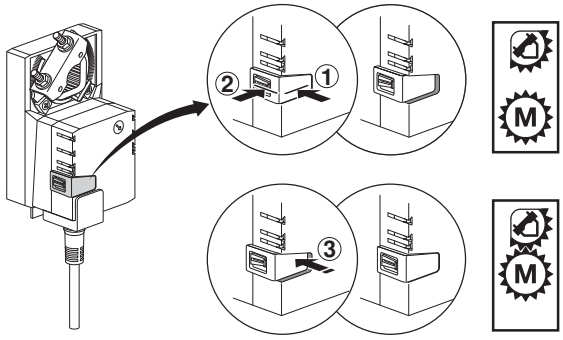

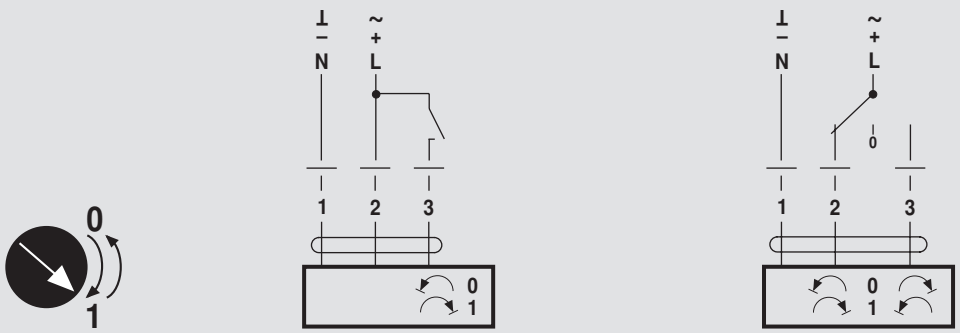

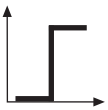

AC 24 V / DC 24 V

DC 48 ... 110 V
(NM72A..)

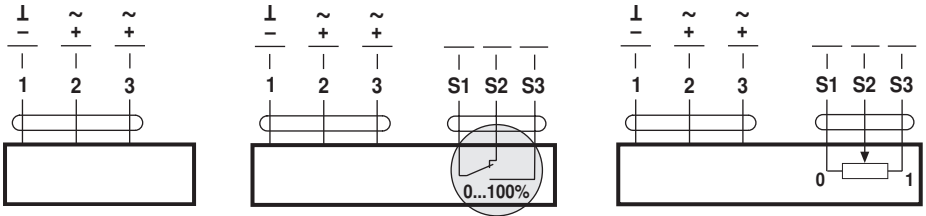

NM24A..
NM72A..

NM24A-S..

NM24AP5..

AC 100 ... 240 V

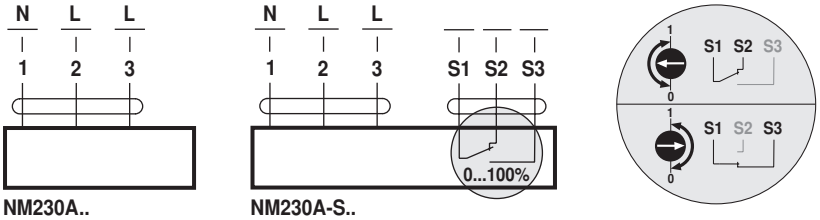

NM230A..

NM230A-S..

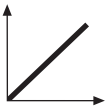

AC 24 V / DC 24 V

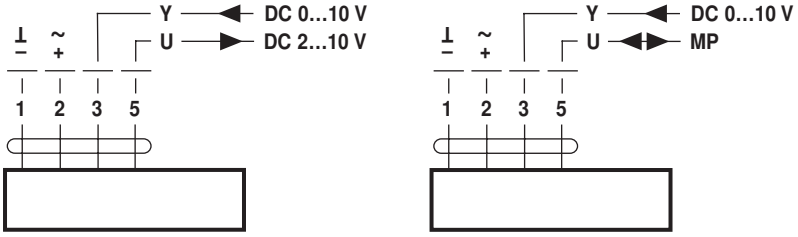

NM24A-SR..
NM24A-MF..

NM24A-MP..

DC 48 ... 110 V
(NM72A-SR..)

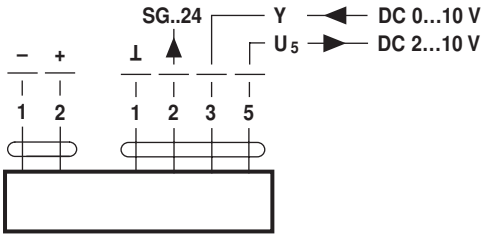

NM72A-SR..

AC 100 ... 240 V

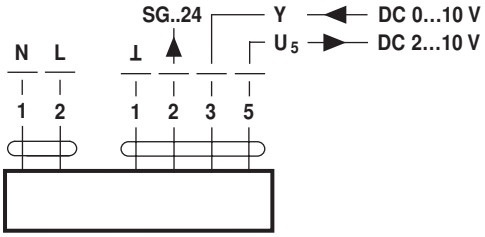

NM230ASR..

AC 24 V / DC 24 V
(NM24A-V / VR..)

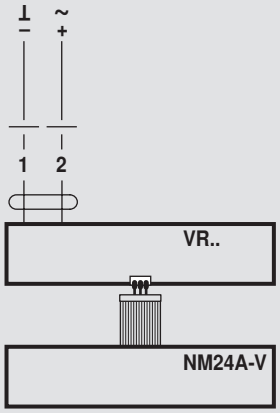

NM24A-V / VR..

BELIMO

Technical data sheet — Damper actuator NM230A-S

Damper actuator for operating air control dampers in ventilation and air-conditioning systems for building services installations

- **For air control dampers up to approx. 2 m²**
- **Torque 10 Nm**
- **Nominal voltage AC 100 ... 240 V**
- **Control: Open-close or 3-point**
- **Integrated auxiliary switch**

Technical data

Electrical data	Nominal voltage		AC 100 ... 240 V, 50/60 Hz
	Nominal voltage range		AC 85 ... 265 V
	Power consumption	In operation	2.5 W @ nominal torque
		At rest	0.6 W
		For wire sizing	6 VA
	Auxiliary switch		1 x SPDT, 1 mA ... 3 (0.5) A, AC 250 V ⧈ (0 ... 100% adjustable)
	Connection	Motor	Cable 1 m, 3 x 0.75 mm²
		Auxiliary switch	Cable 1 m, 3 x 0.75 mm²
Functional data	Torque (nominal torque)		Min. 10 Nm @ nominal voltage
	Direction of rotation		Reversible with switch 0 ↶ or 1 ↷
	Manual override		Gearing latch disengaged with pushbutton, self-resetting
	Angle of rotation		Max. 95°∢, limited on both sides by means of adjustable, mechanical end stops
	Running time		150 s
	Sound power level		Max. 35 dB (A)
	Position indication		Mechanical, pluggable
Safety	Protection class		**II** Totally insulated ⧈
	Degree of protection		IP54 in any mounting position
	EMC Low voltage directive		CE according to 89/336/EEC CE according to 73/23/EEC
	Mode of operation		Type 1 (to EN 60730-1)
	Ambient temperature range		–30 ... +50°C
	Non-operating temperature		–40 ... +80°C
	Ambient humidity range		95% r.H., non-condensating (EN 60730-1)
	Maintenance		Maintenance-free
Dimensions / Weight	Dimensions		See «Dimensions» on page 2
	Weight		Approx. 850 g

Safety notes

⚠

- **The damper actuator is not allowed to be used outside the specified field of application, especially not in aircraft or any other form of air transport.**
- **Caution: Power supply voltage !**
- **Assembly must be carried out by trained personnel. Any legal regulations or regulations issued by authorities must be observed during assembly.**
- **The device may only be opened at the manufacturer‘s site. It does not contain any parts that can be replaced or repaired by the user.**
- **The cables must not be removed from the device.**
- **When calculating the required torque, the specifications supplied by the damper manufacturers (cross section, design, installation site), and the air flow conditions must be observed.**
- **The device contains electrical and electronic components and is not allowed to be disposed of as household refuse. All locally valid regulations and requirements must be observed.**

Product features

Simple direct mounting Simple direct mounting on the damper spindle with a universal spindle clamp, supplied with an anti-rotation strap to prevent the actuator from rotating.

Manual override Manual operation is possible with the self-resetting pushbutton (the gearing latch remains disengaged as long as the pushbutton is pressed).

Adjustable angle of rotation Adjustable angle of rotation with mechanical end stops.

High functional reliability The actuator is overload-proof, requires no limit switches and automatically stops when the end stop is reached.

Flexible signalization Flexible signalization with adjustable auxiliary switch (0 ... 100%).

Accessories

	Description	Data sheet
Electrical accessories	Auxiliary switch S..A..	T2 - S..A..
	Feedback potentiometer P..A..	T2 - P..A..
Mechanical accessories	Various accessories (clamps, shaft extensions etc.)	T2 - Z-NM..A..

Electrical installation

Wiring diagrams

Note
- Caution: Power supply voltage !
- Other actuators can be connected in parallel. Please note the performance data.

Open-close control

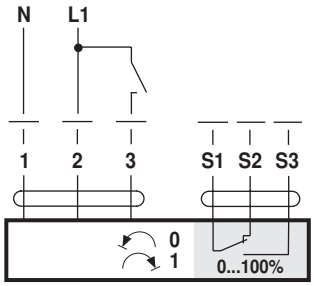

3-point control

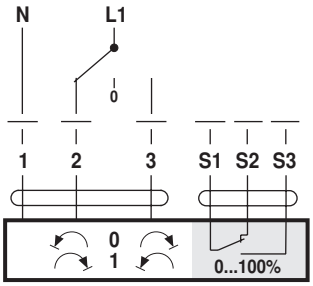

Direction of rotation

Auxiliary switch

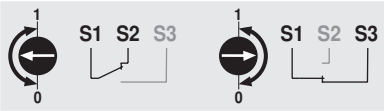

Dimensions [mm]

Dimensional drawings

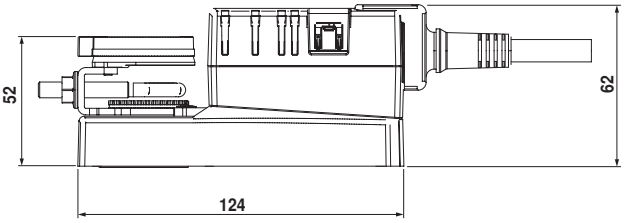

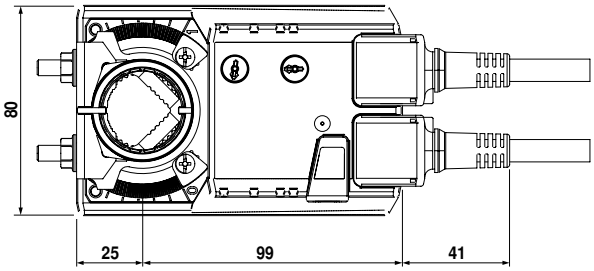

Damper spindle	Length	
Clamp on top	min. 40	8 ... 26.7
Clamp on bottom *	min. 20	8 ... 20

* Option (Accessory K-NA)

70214-00002.E

1

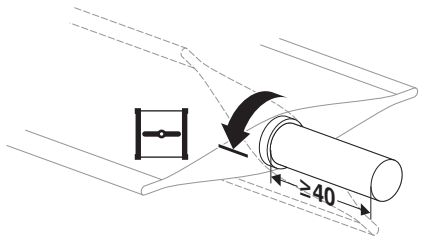

8 ... 26.7	≥8	≤26.7

2

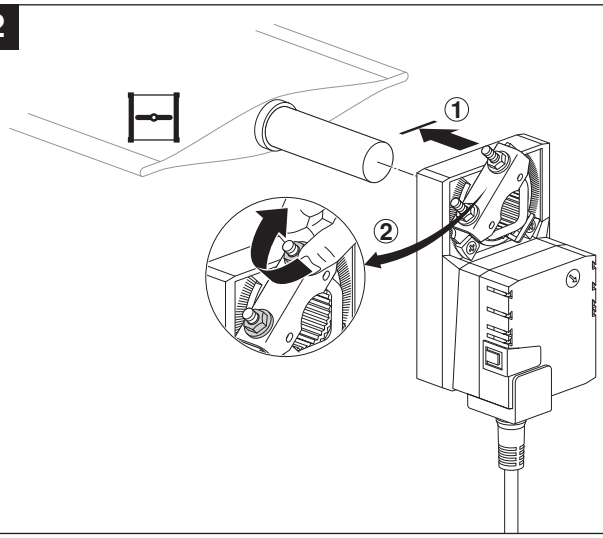

3

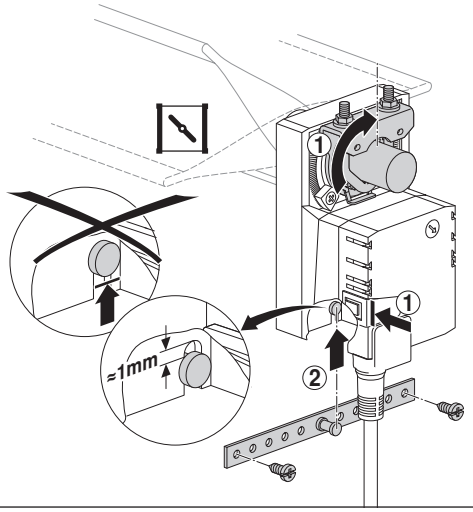

4

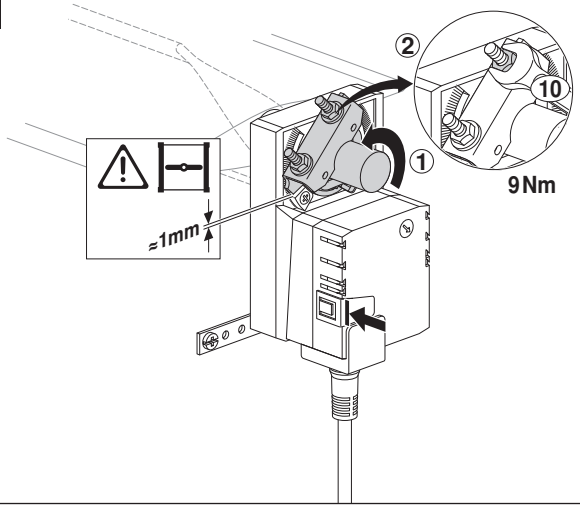

5

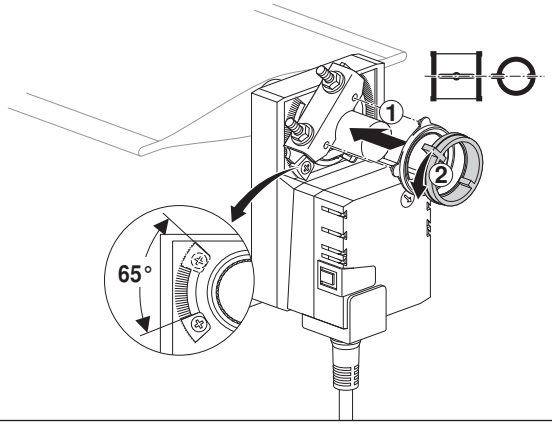

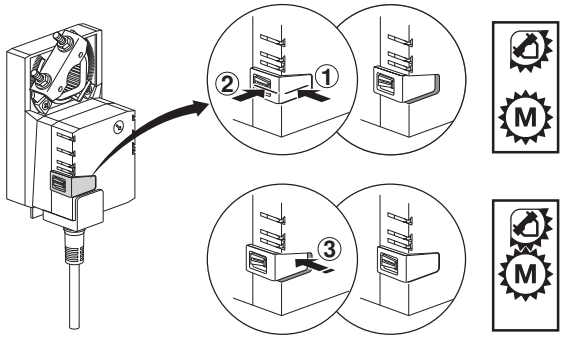

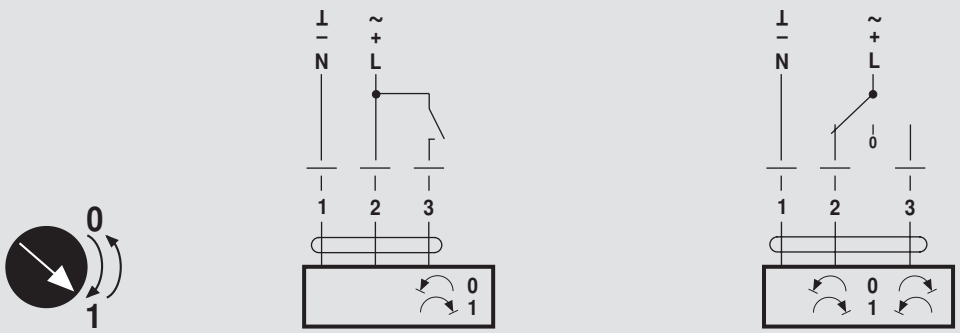

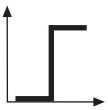

AC 24 V / DC 24 V

DC 48 ... 110 V
(NM72A..)

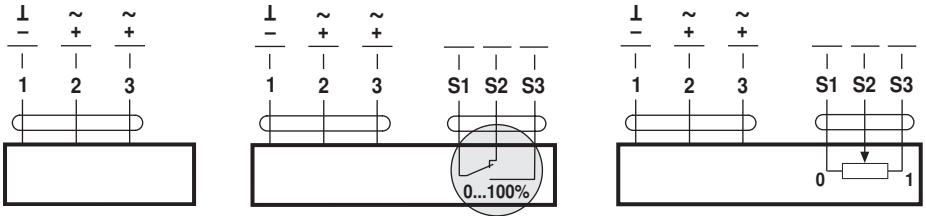

NM24A..
NM72A..

NM24A-S..

NM24AP5..

AC 100 ... 240 V

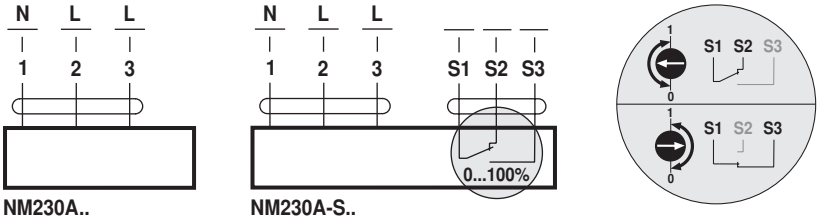

NM230A..

NM230A-S..

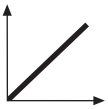

AC 24 V / DC 24 V

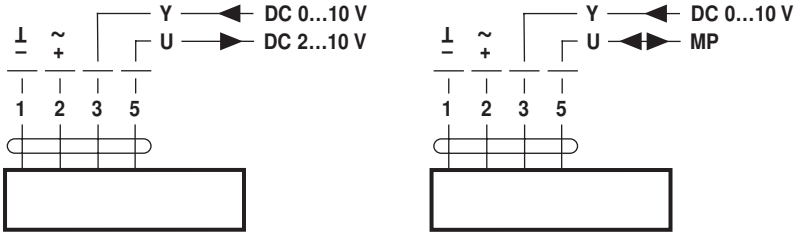

NM24A-SR..
NM24A-MF..

NM24A-MP..

DC 48 ... 110 V
(NM72A-SR..)

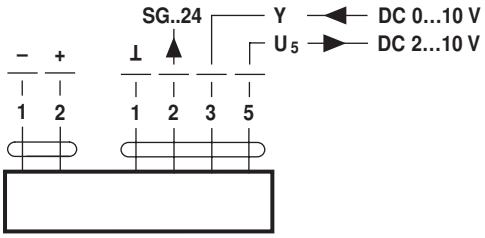

NM72A-SR..

AC 100 ... 240 V

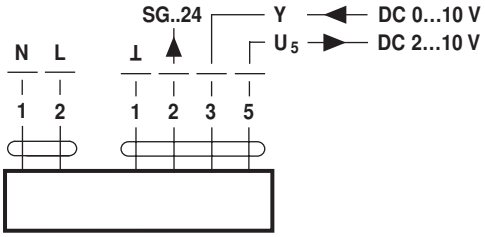

NM230ASR..

AC 24 V / DC 24 V
(NM24A-V / VR..)

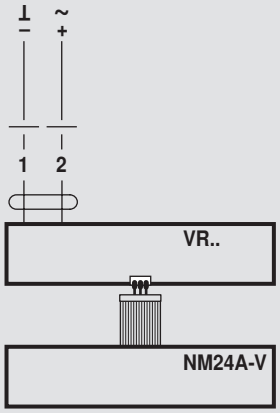

NM24A-V / VR..

BELIMO

Technical data sheet — Damper actuator NM230ASR

Damper actuator for operating air control dampers in ventilation and air-conditioning systems for building services installations

- **For air control dampers up to approx. 2 m²**
- **Torque 10 Nm**
- **Nominal voltage AC 100 ... 240 V**
- **Control: modulating DC 0 ... 10 V, position feedback DC 2 ... 10 V**

Technische Daten

Electrical data	Nominal voltage		AC 100 ... 240 V, 50/60 Hz
	Nominal voltage range		AC 85 ... 265 V
	Power consumption	In operation	3.5 W @ nominal torque
		At rest	1 W
		For wire sizing	6.5 VA
	Connection	Power supply	Cable 1 m, 2 x 0.75 mm²
		Signals	Cable 1 m, 4 x 0.75 mm²
Functional data	Torque (nominal torque)		Min. 10 Nm @ nominal voltage
	Control	Control signal Y	DC 0 ... 10 V, typical input impedance 100 kΩ
		Working range	DC 2 ... 10 V
	Position feedback (Measuring voltage)		DC 2 ... 10 V, max. 1 mA
	Position accuracy		±5%
	Direction of rotation		Reversible with switch 0 / 1
	Direction of rotation at Y = 0 V		at switch position 0 ↺ resp. 1 ↻
	Manual override		Gearing latch disengaged with pushbutton, self-resetting
	Angle of rotation		Max. 95°∢, limited on both sides by means of adjustable, mechanical end stops
	Running time		150 s
	Sound power level		Max. 35 dB (A)
	Position indication		Mechanical, pluggable
Safety	Protection class		**II** Totally insulated ⧈
	Degree of protection		IP54 in any mounting position
	EMC		CE according to 89/336/EEC
	Low voltage directive		CE according to 73/23/EWG
	Mode of operation		Type 1 (to EN 60730-1)
	Ambient temperature range		–30 ... +50°C
	Non-operating temperature		–40 ... +80°C
	Ambient humidity range		95% r.H., non-condensating (EN 60730-1)
	Maintenance		Maintenance-free
Dimensions / Weight	Dimensions		See «Dimensions» on page 2
	Weight		Approx. 950 g

Safety notes

⚠

- **The damper actuator is not allowed to be used outside the specified field of application, especially in aircraft or any other form of air transport.**
- **Caution: Power supply voltage !**
- **Assembly must be carried out by trained personnel. Any legal regulations or regulations issued by authorities must be observed during assembly.**
- **The device may only be opened at the manufacturer‘s site. It does not contain any parts that can be replaced or repaired by the user.**
- **The cable must not be removed from the device.**
- **When calculating the required torque, the specifications supplied by the damper manufacturers (cross section, design, installation site), and the air flow conditions must be observed.**
- **The device contains electrical and electronic components and is not allowed to be disposed of as household refuse. All locally valid regulations and requirements must be observed.**

Product features

Mode of operation
The actuator is controlled by means of a standard control signal DC 0 ... 10 V. It opens to the position dictated by this signal. The measuring voltage U allows the damper position (0 ... 100%) to be electrically indicated and serves as a follow-up control signal for other actuators.

Simple direct mounting
Simple direct mounting on the damper spindle with a universal spindle clamp, supplied with an anti-rotation strap to prevent the actuator from rotating.

Manual override
Manual operation is possible with the self-resetting pushbutton (the gearing latch remains disengaged as long as the pushbutton is pressed).

Adjustable angle of rotation
Adjustable angle of rotation with mechanical end stops.

High functional reliability
The actuator is overload-proof, requires no limit switches and automatically stops when the end stop is reached.

Accessories

	Description	Data sheet
Electrical accessories	Auxiliary switch S..A..	T2 - S..A..
	Feedback potentiometer P..A..	T2 - P..A..
	Positioner SG..24	T2 - SG..24
Mechanical accessories	Various accessories (clamps, shaft extensions etc.)	T2 - Z-NM..A..

Electrical installation

Wiring diagrams

Notes
- Caution: Power supply voltage !
- Other actuators can be connected in parallel. Please note the performance data.

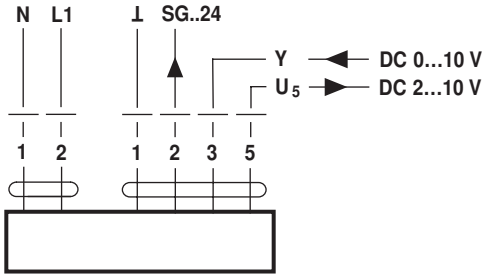

Dimensions [mm]

Dimensional drawings

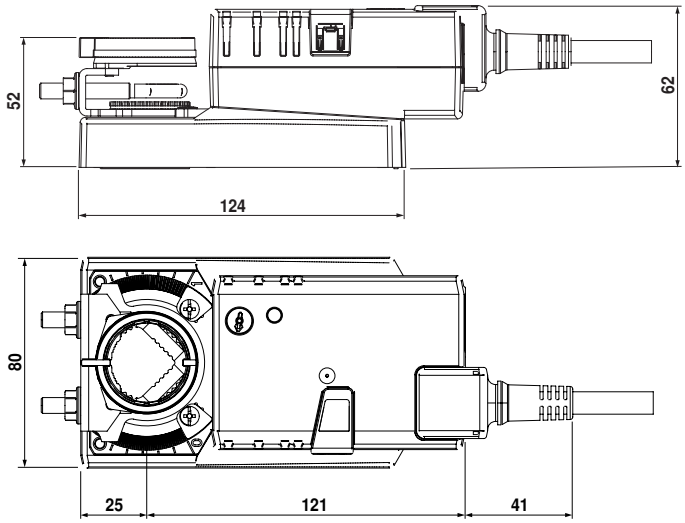

Damper spindle	Length	
Clamp on top	min. 40	8 ... 26.7
Klemmbock unten *	min. 20	8 ... 20

* Option (Accessory K-NA)

70214-00002.E

1

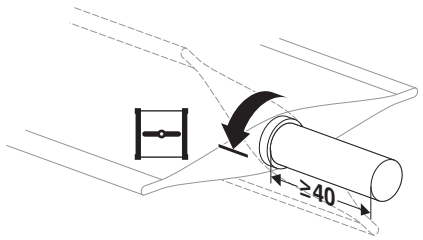

8 ... 26.7	≥8	≤26.7

2

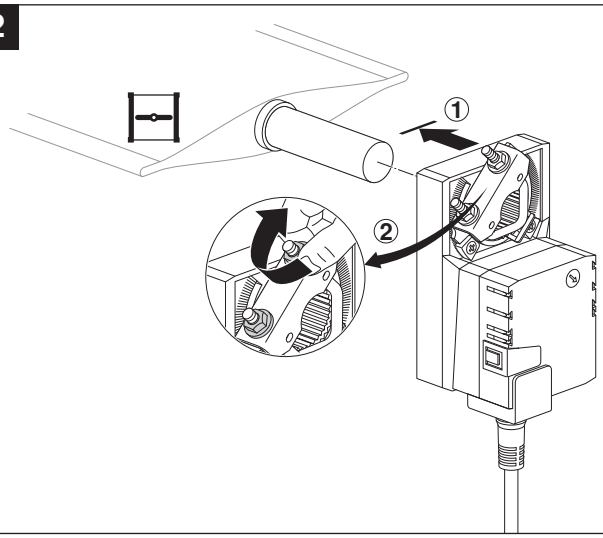

3

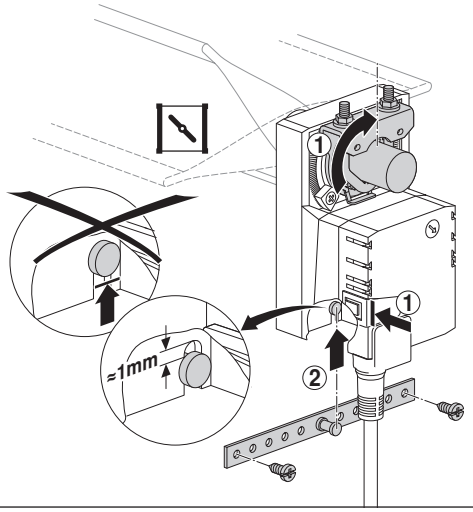

4

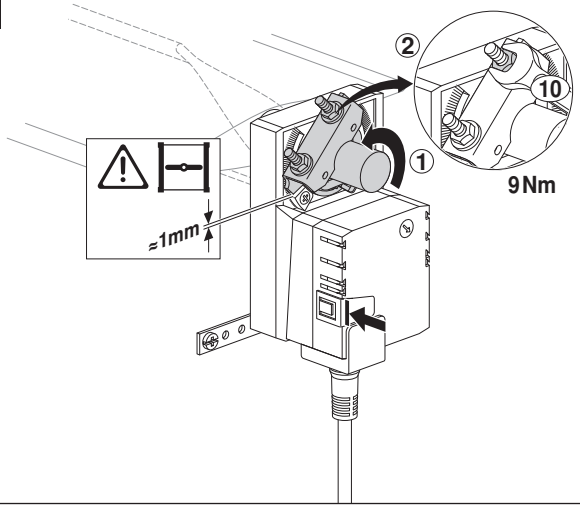

5

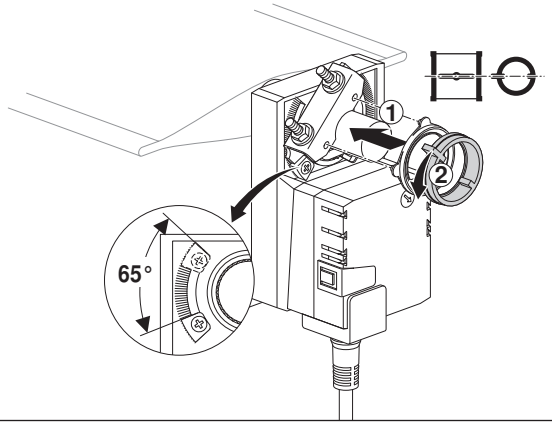

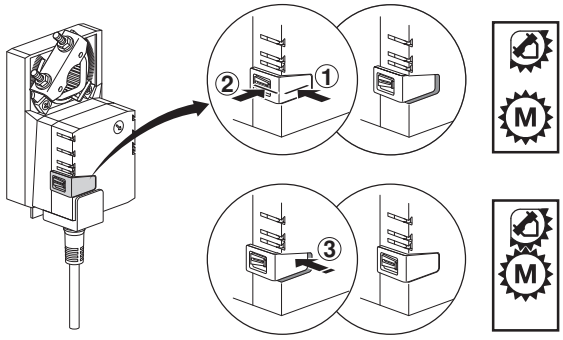

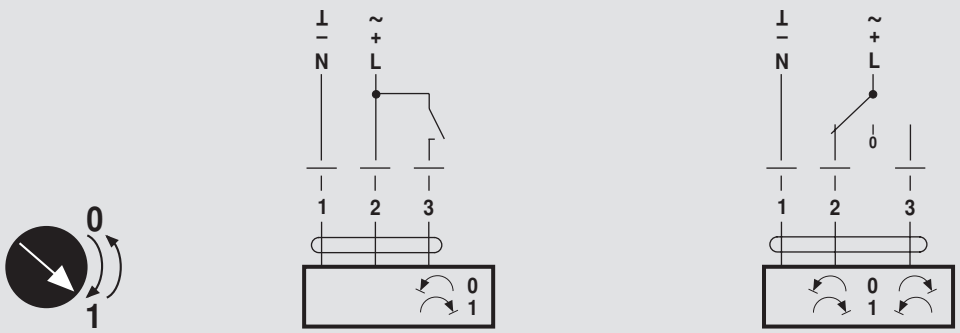

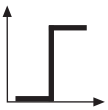

AC 24 V / DC 24 V

DC 48 ... 110 V
(NM72A..)

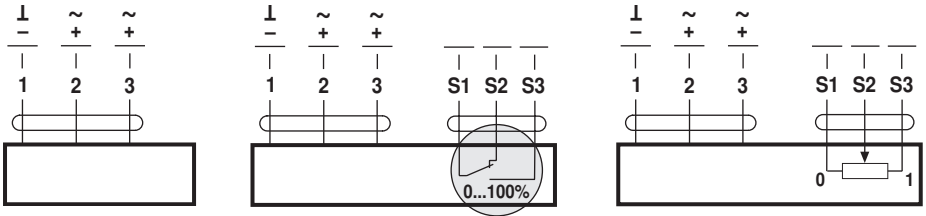

NM24A..
NM72A..

NM24A-S..

NM24AP5..

AC 100 ... 240 V

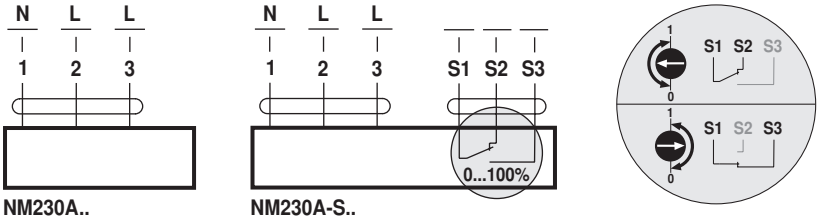

NM230A..

NM230A-S..

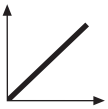

AC 24 V / DC 24 V

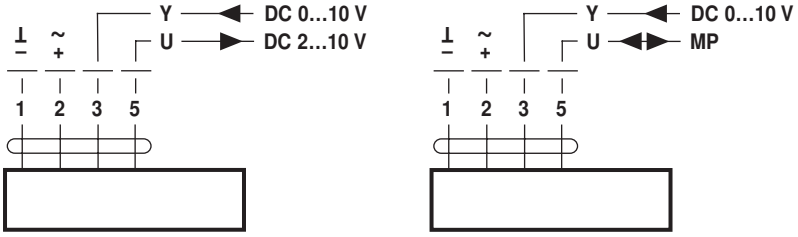

NM24A-SR..
NM24A-MF..

NM24A-MP..

DC 48 ... 110 V
(NM72A-SR..)

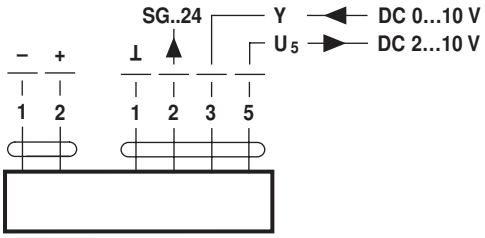

NM72A-SR..

AC 100 ... 240 V

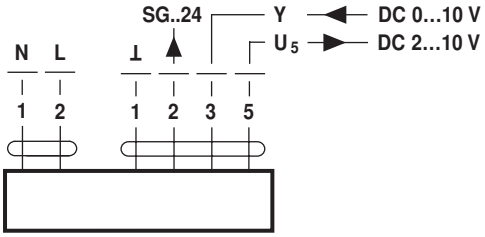

NM230ASR..

AC 24 V / DC 24 V
(NM24A-V / VR..)

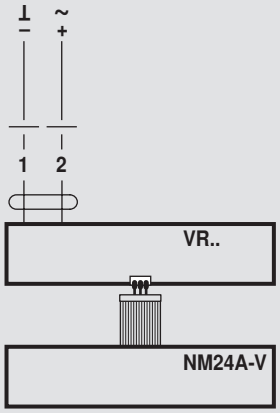

NM24A-V / VR..

Multifunctional damper actuator for adjusting air dampers in ventilation and air conditioning systems in buildings

- **Air damper size up to approx. 2 m²**
- **Torque 10 Nm**
- **Nominal voltage AC/DC 24 V**
- **Control: Modulating DC 0 ... 10 V or variable**
- **Position feedback DC 2 ... 10 V or variable**

Technical data

Electrical data			
Nominal voltage	AC 24 V, 50/60 Hz / DC 24 V		
Power supply range	AC 19.2 ... 28.8 V / DC 21.6 ... 28.8 V		
Power consumption In operation At rest For wire sizing	3.5 W at nominal torque 1.25 W 5.5 VA		
Connection	Cable 1 m, 4 x 0.75 mm²		
Functional data	**Factory settings**	**Variable**	**Settings**
Torque (nominal torque)	Min. 10 Nm at nominal voltage	25%, 50%, 75% reduced	.....
Control Control signal Y Working range	DC 0 ... 10 V, input impedance 100 kΩ DC 2 ... 10 V	Open-close, 3-point (AC only) Start point DC 0.5 ... 30 V End point DC 2.5 ... 32 V	....
Position feedback (measuring voltage U)	DC 2 ... 10 V, max. 0.5 mA	Start point DC 0.5 ... 8 V End point DC 2.5 ... 10 V	.....
Uni-rotation	±5%		
Direction of rotation	Can be selected with 0 / 1		
Direction of motion at Y = 0 V	In switch position 0 ↺ or 1 ↻	Electronically reversible	.....
Manual override	Disengaging the gearing latch by means of a pushbutton, self-resetting		
Angle of rotation	Max. 95°∢, can be limited at both ends with mechanical adjustable end stops		
Running time	150 s	43 ... 173 s	.....
Automatic adjustment of running time, operating range and measuring signal U to match the mechanical angle of rotation	Manual triggering of this adaption by pressing the button «Adaption» or with the PC-Tool	Automatic adaption whenever the supply voltage is switched on, or manual triggering	.....
Override control	MAX (maximum position) = 100% MIN (minimum position) = 0% ZS (intermediate position, AC only) = 50%	MAX = (MIN + 30°∢) ... 100% MIN = 0% ... (MAX – 30°∢) ZS = MIN ... MAX	.....
Sound power level	Max. 35 dB (A)	With a running time of 43 s = 45 dB (A) 173 s = 35 dB (A)	
Position indication	Mechanical, plug-on		
Safety			
Protection class	**III** Safety extra-low voltage		
Degree of protection	IP54 in all mounting positions		
EMC	CE according to 89/336/EEC		
Mode of operation	Type 1 (to EN 60730-1)		
Rated impulse voltage	0.8 kV (to EN 60730-1)		
Control pollution degree	3 (in acc. with EN 60730-1)		
Ambient temperature range	–30 ... +50°C		
Non-operating temperature	–40 ... +80°C		
Ambient humidity range	95% r.H., non-condensating (to EN 60730-1)		
Maintenance	Maintenance-free		

Technical data *(Continued)*

Dimensions/weight

Dimensions	See «Dimensions» on page 5
Weight	Approx. 710 g

Safety notes

- **The damper actuator is not allowed to be used outside the specified field of application, especially in aircraft or in any other airborne means of transport.**
- **It may only be installed by suitably trained personnel. All applicable legal or institutional installation regulations must be complied with.**
- **The device may only be opened at the manufacturer's site. It does not contain any parts that can be replaced or repaired by the user.**
- **The cable is not allowed to be removed from the unit.**
- **When calculating the torque required, the specifications supplied by the damper manufacturers concerning the cross section, design and installation site, and the air flow conditions must be observed.**
- **The device contains electrical and electronic components and is not allowed to be disposed of as household refuse. All locally valid regulations and requirements must be observed.**

Product features

Mode of operation
The actuator is controlled with a standard modulating signal of DC 0 ... 10 V and travels to the position defined by the control signal. Measuring voltage U serves for the electrical display of the damper position 0 ... 100% and as slave control signal for other actuators.

Parameterisable actuators
The factory settings cover the most common applications. Input and output signals and other parameters can be altered with the MFT-H parameterising device or the BELIMO Service Tool, MFT-P.

Simple direct mounting
Simple direct mounting on the damper spindle with a universal spindle clamp, supplied with an anti-rotation strap to prevent the actuator from rotating.

Manual override
Manual operation with self-resetting pushbutton possible (the gear is disengaged for as long as the button is pressed).

Adjustable angle of rotation
Adjustable angle of rotation with mechanical end stops.

High functional reliability
The actuator is overload-proof, requires no limit switches and automatically stops when the end stop is reached.

Home position
When the supply voltage is switched on for the first time, i.e. at commissioning or after pressing the «gear disengagement» switch, the actuator travels to the home position.

Pos. direction of rotation switch	Home position	
0 / 1	Y = 0	ccw Left stop
	Y = 0	cw Right stop

The actuator then moves into the position defined by the control signal.

Accessories

	Description	Data sheet
Electrical accessories	Auxiliary switch S..A..	T2 - S..A..
	Feedback potentiometer P..A..	T2 - P..A..
	Manual parameterising device MFT-H	T2 - MFT-H
	PC-Tool MFT-P	T2 - MFT-P
	Position sensor SG..24	T2 - SG..24
	Digital position indication ZAD24	T2 - ZAD24
Mechanical accessories	Various accessories (clamps, shaft extensions etc.)	T2 - Z-NM..A..

Electrical installation

Wiring diagram

Note
- Connect via safety isolation transformer.
- Parallel connection of other actuators possible. Note the performance data.

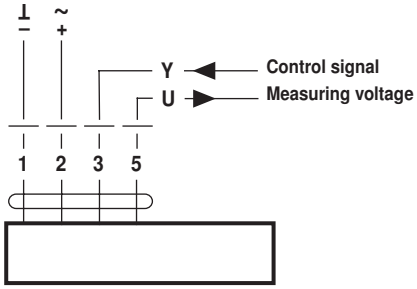

Functions with basic values

Override control with AC 24 V with relay contacts

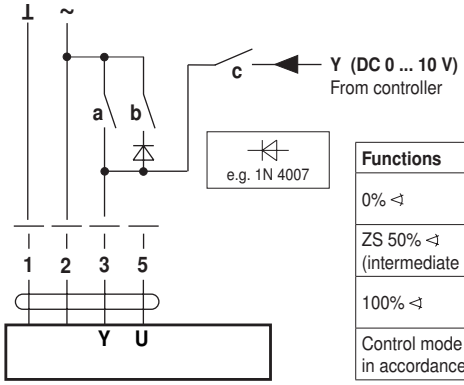

Functions	a	b	c
0% ◁	⁄	⁄	⁄
ZS 50% ◁ (intermediate position)	⁄	⊥	⁄
100% ◁	⊥	⁄	⁄
Control mode in accordance with Y	⁄	⁄	⊥

Override control with AC 24 V with rotary control switch

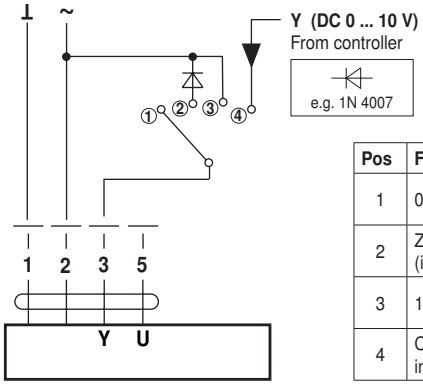

Pos	Functions
1	0% ◁
2	ZS 50% ◁ (intermediate position)
3	100% ◁
4	Control mode in accordance with Y

Remote control 0 ... 100 %

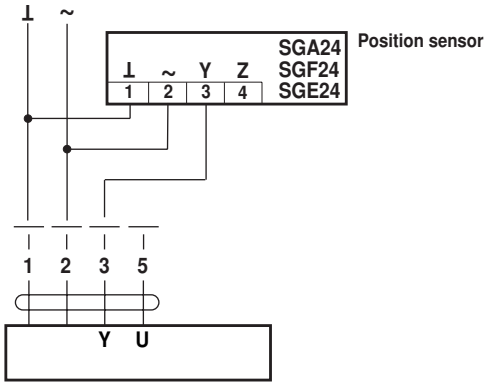

Minimum limit

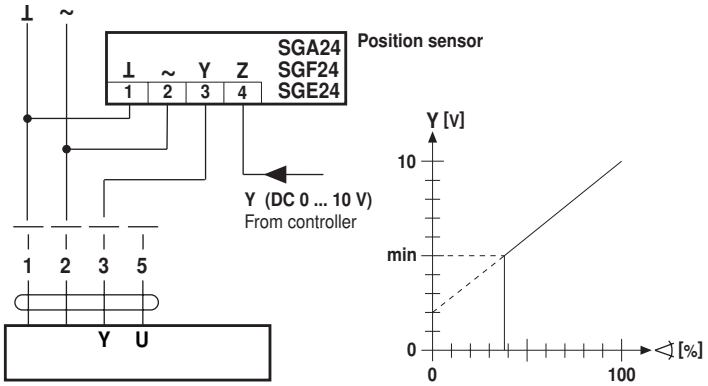

Master/Slave control (position-dependent)

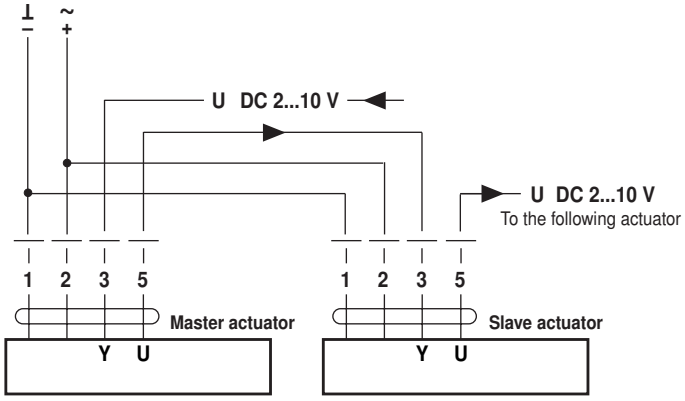

Control with 4 ... 20 mA via external resistance

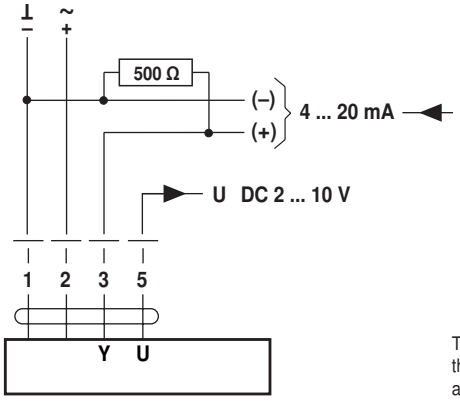

The 500 Ω resistor converts the 4 ... 20 mA current signal to a voltage signal DC 2 ... 10 V

Functions with basic values *(continued)*

Position indication

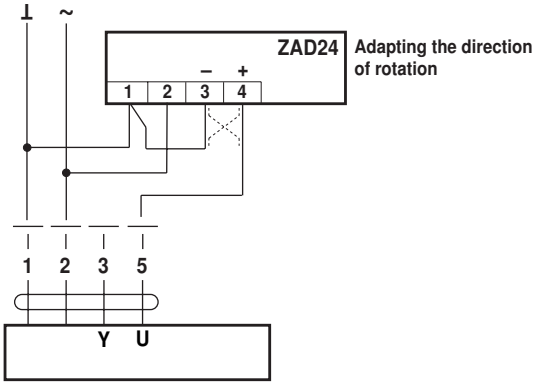

Functional check

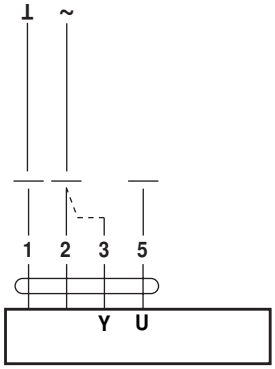

Procedure

- Apply AC 24 V to connection 1 and 2
- Disconnect connection 3:
  - For direction of rotation 0: Actuator turns in the direction of
  - For direction of rotation 1: Actuator turns in the direction of
- Short circuit connections 2 and 3:
  - Actuator runs in the opposite direction

Functions for actuators with specific parameters

Override control and limiting with AC 24 V with relay contacts

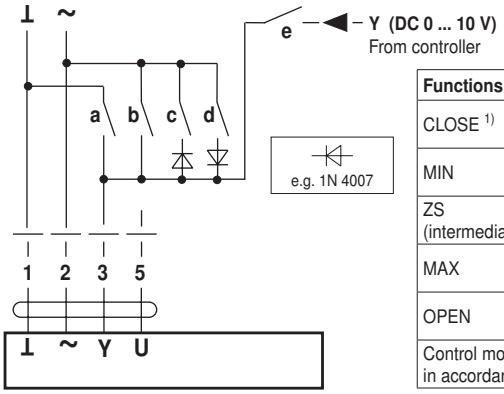

Functions	a	b	c	d	e
CLOSE [1]	⊥	–	–	–	–
MIN	–	–	–	–	–
ZS (intermediate position)	–	–	⊥	–	–
MAX	–	⊥	–	–	–
OPEN	–	–	–	⊥	–
Control mode in accordance with Y	–	–	–	–	⊥

Override control and limiting with AC 24 V with rotary switch

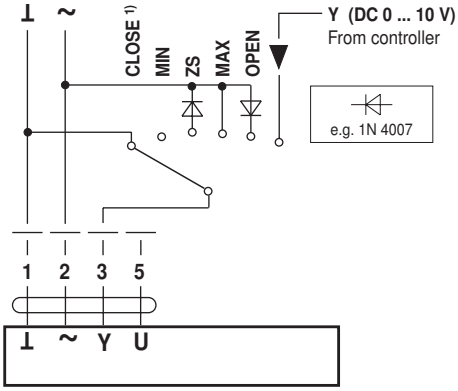

[1] **Caution!** This function is only guaranteed if the start point of the operating range is defined as min. 0.6 V.

3-point control

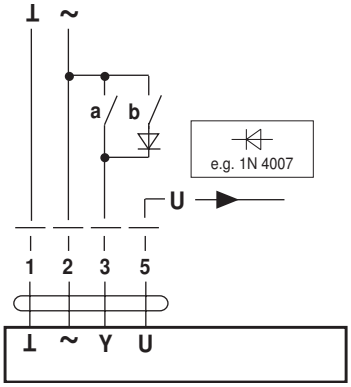

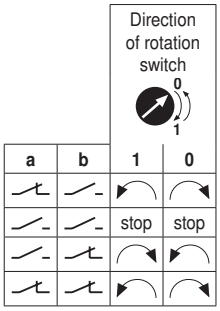

a	b	1	0
⊥	–	↺	↻
–	–	stop	stop
–	⊥	↻	↺
⊥	⊥	↺	↻

Open/close control

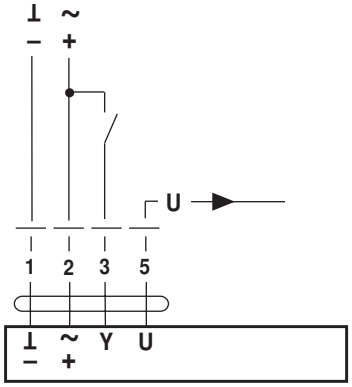

Dimensions [mm]

Dimensional diagrams

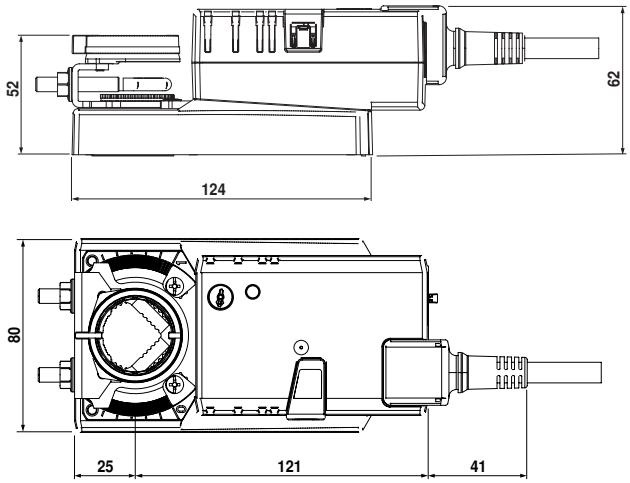

Damper spindle	Length	
Clamp, top	Min. 40	8 ... 26.7
Clamp, bottom *	Min. 20	8 ... 20

* Option (accessories K-NA)

Operating controls and indicators

① **Direction of rotation switch**

Switching over: Direction of rotation changes

② **Pushbutton and green LED display**

Off: No voltage supply or malfunction
Green on: Operation
Press button: Switches on angle of rotation adaption followed by standard operation

③ **Pushbutton and yellow LED display**

Off: Standard operation
Yellow on: Adaption or synchronising process active
Press button: No function

④ **Gear disengagement switch**

Press button: Gear disengaged, motor stops, manual operation possible
Release button: Gear engaged, synchronisation starts, followed by standard operation

⑤ **Service plug**

For connecting parameterising and service tools

70214-00002.E

1

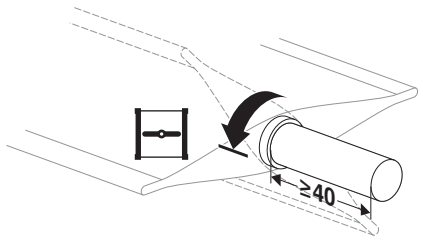

8 ... 26.7	≥8	≤26.7

2

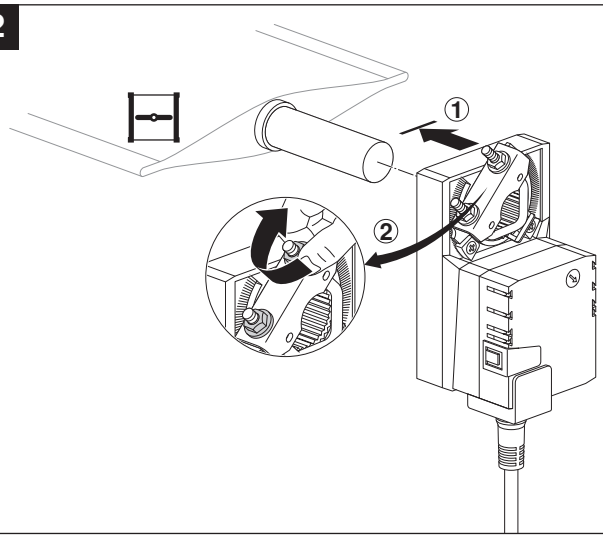

3

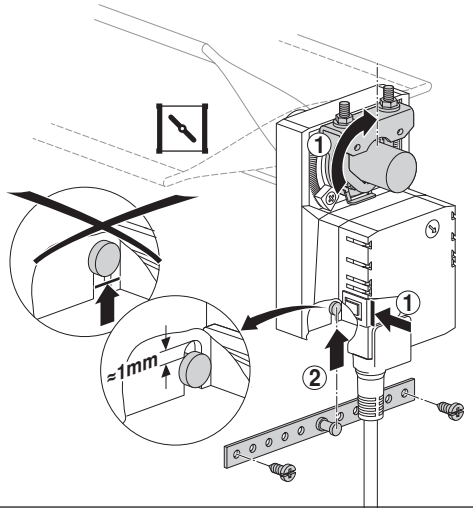

4

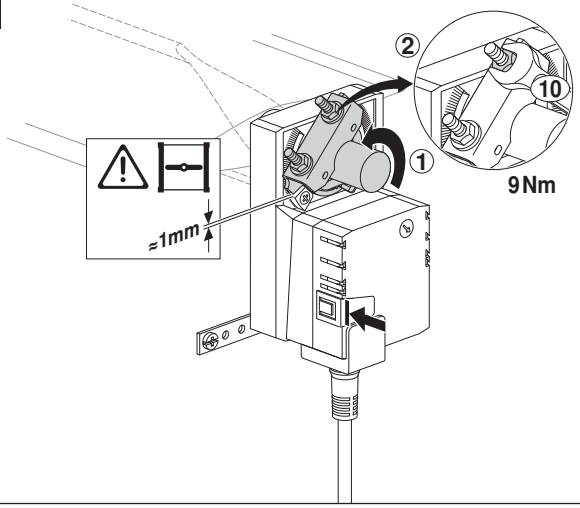

5

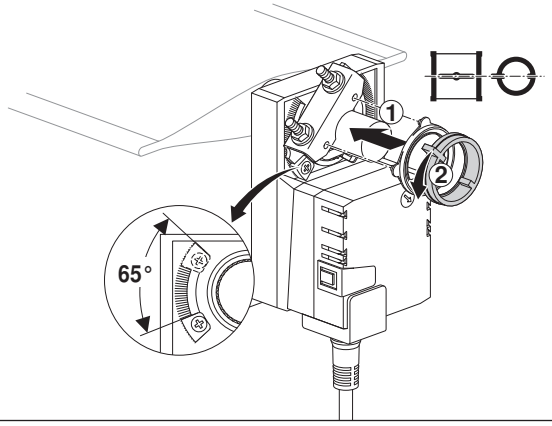

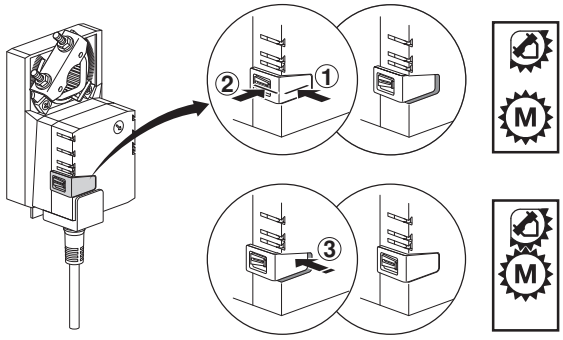

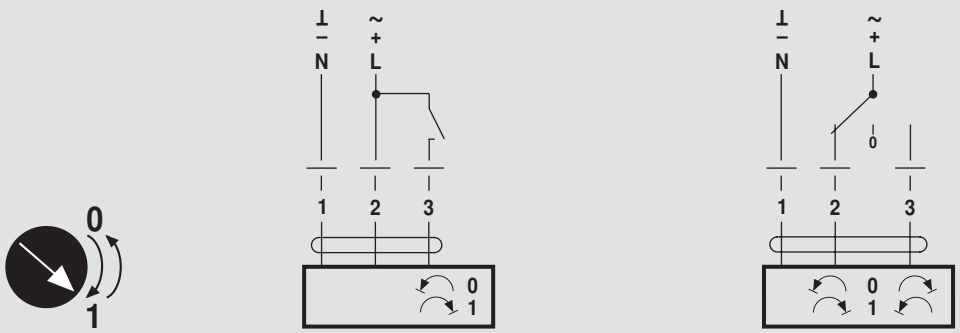

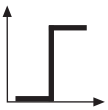

AC 24 V / DC 24 V

DC 48 ... 110 V
(NM72A..)

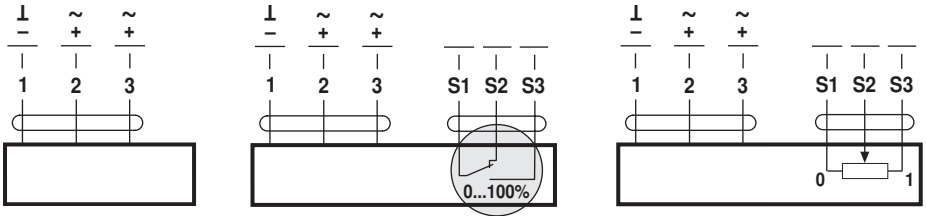

NM24A..
NM72A..

NM24A-S..

NM24AP5..

AC 100 ... 240 V

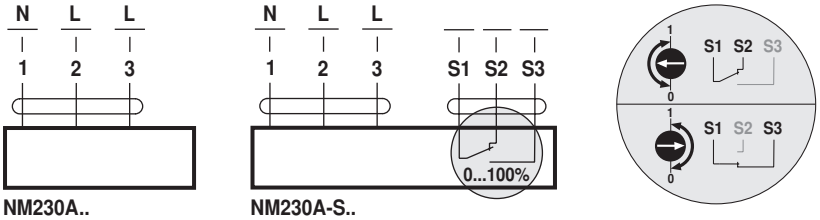

NM230A..

NM230A-S..

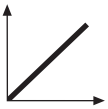

AC 24 V / DC 24 V

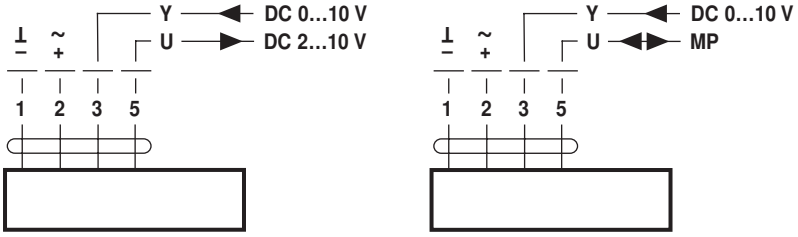

NM24A-SR..
NM24A-MF..

NM24A-MP..

DC 48 ... 110 V
(NM72A-SR..)

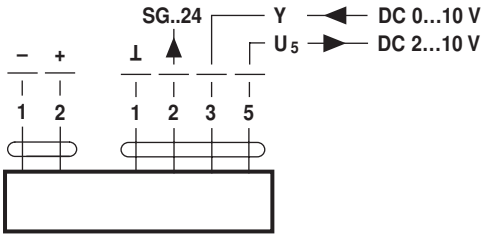

NM72A-SR..

AC 100 ... 240 V

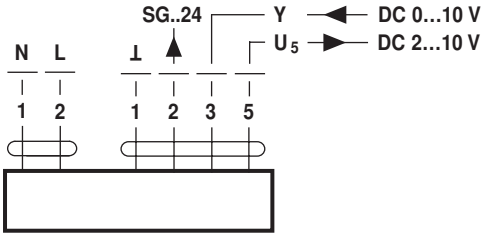

NM230ASR..

AC 24 V / DC 24 V
(NM24A-V / VR..)

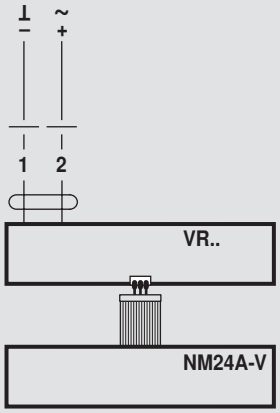

NM24A-V / VR..